Series 04

Versatile. Robust and reliable.

https://eao.com/04

04

Key advantages

- Versatile and reliable range of products
- Ideal for driver's cabs
- Modern and robust design
- Safe and ergonomically friendly in use
- Pronounced tactile feedback
- Customised and standardised markings

Typical application areas

- Driver's cab
- Control panels
- Control cabinets
- Special vehicles
- Machinery

Functions

- Pushbutton
- Illuminated pushbutton
- Mushroom-head pushbutton
- Selector switch
- Keylock switch
- Key insert switch
- Lever switch
- Indicator
- Potentiometer
- Stop switch
- Emergency stop switch

Design

- Flush
- Raised

IP front protection

- IP40
- IP54
- IP65
- IP67

Ratings

- 500 VAC (10 A)

Mounting cut-outs

- Ø 22.3 mm
- Ø 30.5 mm
- 30 mm x 30 mm

Terminal

- Plug-in terminal
- Double plug-in terminal
- Screw terminal
- Push-in terminal (PIT)

Lens Material

- Aluminium
- Stainless steel
- Plastic

Markings

- Engraving
- Hot stamping
- Pad printing
- Screen print
- Under eloxal printing

Approvals

- CB (IEC 60947)
- CCC
- CSA
- DNV
- NFF 16-102
- UL

Conformities

- CE
- UKCA
- EN 45545
- ECE R 118
- 2006/42/EU (MD)
- 2011/65/EU (RoHS)
- REACH

Flush design

Pushbutton square	6
Pushbutton round	8
Pushbutton square	10
Pushbutton round	11
Illuminated pushbutton square	12
Illuminated pushbutton round	14
Illuminated pushbutton square	16
Illuminated pushbutton round	18
Mushroom-head pushbutton	19
Selector switch illuminated, 2 positions, short lever, square	20
Selector switch illuminated 2 positions short lever, round	21
Selector switch 2 positions short lever, square	22
Selector switch 2 positions, short lever, round	23
Selector switch 2 positions, short lever, square	24
Selector switch 2 positions, short lever, round	25
Selector switch illuminated, 2 positions, long lever, square	26
Selector switch illuminated, 2 positions, long lever, round	27
Selector switch 2 positions, long lever, square	28
Selector switch 2 positions, long lever, round	29
Selector switch 2 positions, 12 o'clock, long lever, square	30
Selector switch 2 positions, long lever, round	31
Selector switch illuminated, 3 positions, short lever, square	32
Selector switch illuminated, 3 positions, short lever, round	33
Selector switch 3 positions, short lever, square	35
Selector switch 3 positions, short lever, round	36
Selector switch illuminated, 3 positions, long lever, square	37
Selector switch illuminated, 3 positions long lever, round	38
Selector switch 3 positions, long lever, quare	40
Selector switch 3 positions, long lever, round	41
Selector rotary switch, short lever rounded, round	42
Selector rotary switch, short lever, square	43
Selector rotary switch short lever, round	44
Selector rotary switch, long lever rounded, round	45
Selector rotary switch long lever, square	46
Selector rotary switch long lever, round	47
Keylock switch 2 positions, square	48
Keylock switch 2 positions, round	49
Keylock switch 3 positions, square	50
Keylock switch 3 positions, round	51
Keylock rotary switch	52
Key-insert switch 2 positions	53
Key-insert switch 3 positions	54
Key-insert switch 3 positions, conductor switch	55
Lever switch	56
Indicator square	57
Indicator round	59
Indicator square	60
Indicator round	61
Flasher without LED square	62
Flasher without LED round	64
Flasher square	66

04 Content

Flush design

Flasher round	67
Buzzer	68
Stop switch	70

Raised design

Pushbutton square	71
Pushbutton round	73
Pushbutton square	75
Pushbutton round	76
Illuminated pushbutton square	77
Illuminated pushbutton round	79
Illuminated pushbutton square	82
Illuminated pushbutton round	84
Mushroom-head pushbutton	85
Mushroom-head pushbutton illuminated	87
Selector switch illuminated, 2 positions, short lever, square	88
Selector switch illuminated, 2 positions, short lever, round	89
Selector switch 2 positions, short lever, square	90
Selector switch 2 positions, short lever, round	91
Selector switch 2 positions, short lever, square	92
Selector switch 2 positions, short lever, round	93
Selector switch illuminated, 2 positions, long lever, square	94
Selector switch illuminated, 2 positions, long lever, round	95
Selector switch 2 positions, long lever, square	97
Selector switch 2 positions, long lever, round	98
Selector switch 2 positions, long lever, square	99
Selector switch 2 positions, long lever, round	100
Selector switch illuminated, 3 positions, short lever, square	101
Selector switch illuminated, 3 positions, short lever, round	102
Selector switch 3 positions, short lever, square	104
Selector switch 3 positions, short lever, round	105
Selector switch illuminated, 3 positions, long lever, square	106
Selector switch illuminated, 3 positions, long lever, round	107
Selector switch 3 positions, long lever, square	108
Selector switch 3 positions, long lever, round	109
Selector rotary switch, short lever, rounded, square	110
Selector rotary switch, short lever rounded, round	111
Selector rotary switch, short lever, square	112
Selector rotary switch, short lever, round	113
Selector rotary switch, long lever rounded, square	114
Selector rotary switch, long lever rounded, round	115
Selector rotary switch, long lever, square	116
Selector rotary switch, long lever, round	117
Keylock switch 2 positions, square	118
Keylock switch 2 positions, round	119
Keylock switch 3 positions, square	120
Keylock switch 3 positions, round	121
Indicator full-face illumination compact, round	122
Indicator full-face illumination compact, round	124
Indicator full-face illumination, square	125
Indicator full-face illumination, round	126

Raised design	
Indicator full-face illumination, square	128
Indicator full-face illumination, round	129
Indicator front illumination, square	130
Indicator front illumination, round	132
Indicator front illumination, square	134
Indicator front illumination, round	135
Flasher full-face illumination, square	136
Flasher full-face illumination, round	138
Flasher full-face illumination, square	140
Flasher full-face illumination, round	141
Flasher front illumination,square	142
Flasher front illumination, round	144
Flasher front illumination, square	146
Flasher front illumination, round	147
Buzzer	148
Potentiometer	149
Stop switch Ø 37 mm	150
Stop switch Ø 40 mm	151
Emergency stop switch	152
Components	**153**
Accessories	**187**
Technical data	**201**
Marking	**213**
Application guidelines	**219**

04 Flush design

Pushbutton square, IP65

Product can differ from the current configuration.

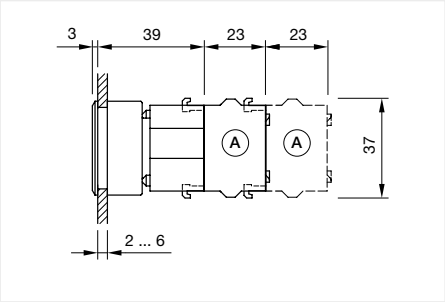

Dimensions [mm]
A = Screw terminal

General information

- Max. 3 switching elements can be clipped on

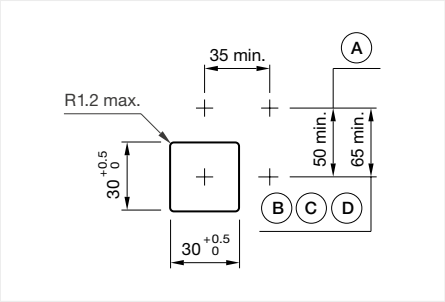

Mounting cut-outs [mm]
A = Screw terminal
B = Push-in terminal (PIT)
C = Plug-in terminal 6.3 mm x 0.8 mm
D = Double plug-in terminal 6.3 mm x 0.8 mm

Equipment consisting of (schematic overview)

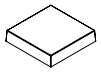
Lens

Lens holder

Actuator

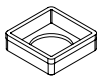
Press frame

Bayonet flange

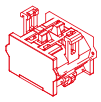
Switching element Page 167

Each Part Number listed below includes all the black components shown in the 3D-drawing.

To obtain a complete unit, please select the red components from the pages shown.

Actuator, Front dimension 35 mm x 35 mm

Switching action	Front bezel colour	Front bezel material	Lens colour	Lens material	Housing colour	Housing material	Operating Travel	Part No.	Wiring diagram
Momentary	Black	Plastic	Black	Plastic	Black	Plastic	ca. 5.8 mm ± 0.2 mm	704.209.000	72
	Black	Plastic	Red	Plastic	Black	Plastic	ca. 5.8 mm ± 0.2 mm	704.209.200	72
	Black	Plastic	Yellow	Plastic	Black	Plastic	ca. 5.8 mm ± 0.2 mm	704.209.400	72
	Black	Plastic	Green	Plastic	Black	Plastic	ca. 5.8 mm ± 0.2 mm	704.209.500	72
	Black	Plastic	Blue	Plastic	Black	Plastic	ca. 5.8 mm ± 0.2 mm	704.209.600	72
	Black	Plastic	Colourless	Plastic	Black	Plastic	ca. 5.8 mm ± 0.2 mm	704.209.700	72
	Silver	Plastic	Black	Plastic	Black	Plastic	ca. 5.8 mm ± 0.2 mm	704.210.008	72
	Silver	Plastic	Red	Plastic	Black	Plastic	ca. 5.8 mm ± 0.2 mm	704.210.208	72
	Silver	Plastic	Yellow	Plastic	Black	Plastic	ca. 5.8 mm ± 0.2 mm	704.210.408	72
	Silver	Plastic	Green	Plastic	Black	Plastic	ca. 5.8 mm ± 0.2 mm	704.210.508	72
	Silver	Plastic	Blue	Plastic	Black	Plastic	ca. 5.8 mm ± 0.2 mm	704.210.608	72
	Silver	Plastic	Colourless	Plastic	Black	Plastic	ca. 5.8 mm ± 0.2 mm	704.210.708	72
Maintained	Black	Plastic	Red	Plastic	Black	Plastic	ca. 5.8 mm ± 0.2 mm	704.239.200	73
	Black	Plastic	Yellow	Plastic	Black	Plastic	ca. 5.8 mm ± 0.2 mm	704.239.400	73
	Black	Plastic	Blue	Plastic	Black	Plastic	ca. 5.8 mm ± 0.2 mm	704.239.600	73

Switching action	Front bezel colour	Front bezel material	Lens colour	Lens material	Housing colour	Housing material	Operating Travel	Part No.	Wiring diagram
Maintained	Black	Plastic	Colourless	Plastic	Black	Plastic	ca. 5.8 mm ± 0.2 mm	704.239.700	73
	Silver	Plastic	Colourless	Plastic	Black	Plastic	ca. 5.8 mm ± 0.2 mm	704.240.708	73

Wiring diagrams

Wiring diagram 72	Wiring diagram 73

04 Flush design

Pushbutton round, IP65

Product can differ from the current configuration.

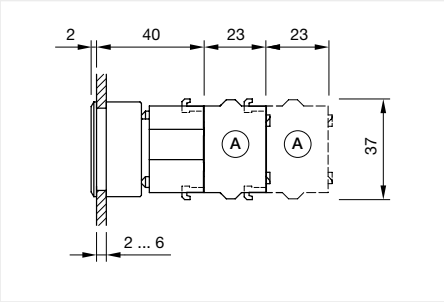

Dimensions [mm]
A = Screw terminal

General information

- Max. 3 switching elements can be clipped on
- The colour of anodised aluminium parts can vary due to technical production reasons

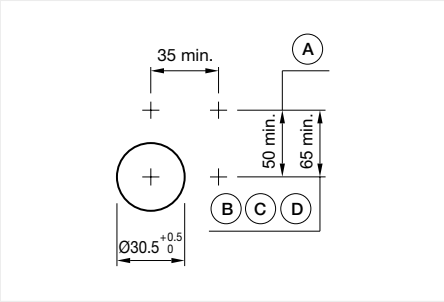

Mounting cut-outs [mm]
A = Screw terminal
B = Push-in terminal (PIT)
C = Plug-in terminal 6.3 mm x 0.8 mm
D = Double plug-in terminal 6.3 mm x 0.8 mm

Equipment consisting of (schematic overview)

Front bezel set

Lens

Marking Plate

Actuator

Bayonet flange

Switching element Page 167

Each Part Number listed below includes all the black components shown in the 3D-drawing.

To obtain a complete unit, please select the red components from the pages shown.

Actuator, Front dimension Ø 35 mm

Switching action	Front bezel colour	Front bezel material	Front bezel surface	Lens colour	Lens material	Housing colour	Housing material	Operating Travel	Part No.	Wiring diagram
Momentary	Nature	Aluminium	anodised	Black	Aluminium	Grey	Plastic	ca. 5.8 mm ± 0.2 mm	704.011.018	72
	Nature	Aluminium	anodised	Red	Aluminium	Grey	Plastic	ca. 5.8 mm ± 0.2 mm	704.011.218	72
	Nature	Aluminium	anodised	Gold	Aluminium	Grey	Plastic	ca. 5.8 mm ± 0.2 mm	704.011.418	72
	Nature	Aluminium	anodised	Olive green	Aluminium	Grey	Plastic	ca. 5.8 mm ± 0.2 mm	704.011.518	72
	Nature	Aluminium	anodised	Blue	Aluminium	Grey	Plastic	ca. 5.8 mm ± 0.2 mm	704.011.618	72
	Nature	Aluminium	anodised	Nature	Aluminium	Grey	Plastic	ca. 5.8 mm ± 0.2 mm	704.011.818	72
	Nature	Aluminium	anodised	Black	Plastic	Grey	Plastic	ca. 5.8 mm ± 0.2 mm	704.012.018	72
	Nature	Aluminium	anodised	Red	Plastic	Grey	Plastic	ca. 5.8 mm ± 0.2 mm	704.012.218	72
	Nature	Aluminium	anodised	Yellow	Plastic	Grey	Plastic	ca. 5.8 mm ± 0.2 mm	704.012.418	72
	Nature	Aluminium	anodised	Green	Plastic	Grey	Plastic	ca. 5.8 mm ± 0.2 mm	704.012.518	72
	Nature	Aluminium	anodised	Blue	Plastic	Grey	Plastic	ca. 5.8 mm ± 0.2 mm	704.012.618	72
	Nature	Aluminium	anodised	Colourless	Plastic	Grey	Plastic	ca. 5.8 mm ± 0.2 mm	704.012.718	72
Maintained	Nature	Aluminium	anodised	Black	Plastic	Grey	Plastic	ca. 5.8 mm ± 0.2 mm	704.042.018	73
	Nature	Aluminium	anodised	Red	Plastic	Grey	Plastic	ca. 5.8 mm ± 0.2 mm	704.042.218	73

Switching action	Front bezel colour	Front bezel material	Front bezel surface	Lens colour	Lens material	Housing colour	Housing material	Operating Travel	Part No.	Wiring diagram
Maintained	Nature	Aluminium	anodised	Yellow	Plastic	Grey	Plastic	ca. 5.8 mm ± 0.2 mm	704.042.418	73
	Nature	Aluminium	anodised	Green	Plastic	Grey	Plastic	ca. 5.8 mm ± 0.2 mm	704.042.518	73
	Nature	Aluminium	anodised	Blue	Plastic	Grey	Plastic	ca. 5.8 mm ± 0.2 mm	704.042.618	73
	Nature	Aluminium	anodised	Colourless	Plastic	Grey	Plastic	ca. 5.8 mm ± 0.2 mm	704.042.718	73

Wiring diagrams

Wiring diagram 72

Wiring diagram 73

04 Flush design

Pushbutton square, IP65

Product can differ from the current configuration.

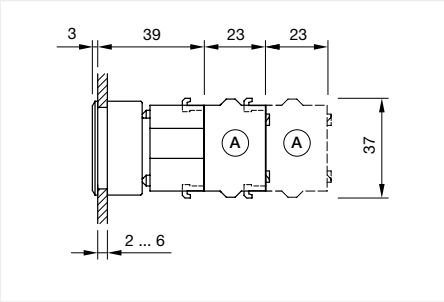

Dimensions [mm]
A = Screw terminal

General information

- Max. 3 switching elements can be clipped on

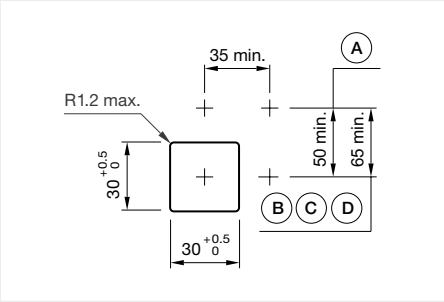

Mounting cut-outs [mm]
A = Screw terminal
B = Push-in terminal (PIT)
C = Plug-in terminal 6.3 mm x 0.8 mm
D = Double plug-in terminal 6.3 mm x 0.8 mm

Equipment consisting of (schematic overview)

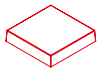
Lens — Page 153

Lens holder — Page 155

Actuator

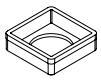
Press frame

Bayonet flange — Page 157

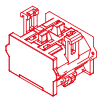
Switching element — Page 167

Each Part Number listed below includes all the black components shown in the 3D-drawing.

To obtain a complete unit, please select the red components from the pages shown.

Actuator, Front dimension 35 mm x 35 mm

Switching action	Front bezel colour	Front bezel material	Housing colour	Housing material	Operating Travel	Part No.	Wiring diagram
Momentary	Black	Plastic	Black	Plastic	ca. 5.8 mm ± 0.2 mm	704.741.0	72
	Silver	Plastic	Black	Plastic	ca. 5.8 mm ± 0.2 mm	704.741.8	72
Maintained	Black	Plastic	Black	Plastic	ca. 5.8 mm ± 0.2 mm	704.742.0	73
	Silver	Plastic	Black	Plastic	ca. 5.8 mm ± 0.2 mm	704.742.8	73

Wiring diagrams

Wiring diagram 72

Wiring diagram 73

Pushbutton round, IP65

Equipment consisting of (schematic overview)

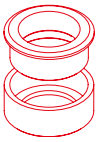

Front bezel set — Page 156

Lens — Page 153

Marking Plate — Page 155

Actuator

Bayonet flange — Page 157

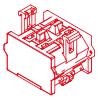

Switching element — Page 167

Each Part Number listed below includes all the black components shown in the 3D-drawing.

To obtain a complete unit, please select the red components from the pages shown.

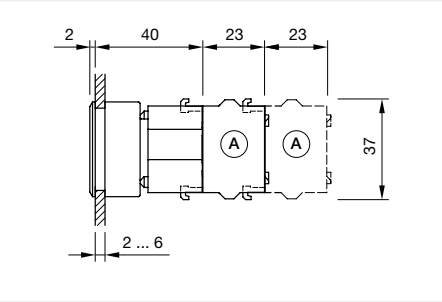

Dimensions [mm]
A = Screw terminal

Product can differ from the current configuration.

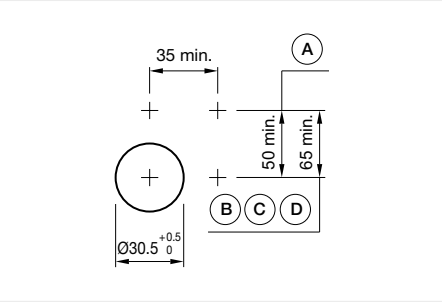

Mounting cut-outs [mm]
A = Screw terminal
B = Push-in terminal (PIT)
C = Plug-in terminal 6.3 mm x 0.8 mm
D = Double plug-in terminal 6.3 mm x 0.8 mm

General information

- Max. 3 switching elements can be clipped on
- The colour of anodised aluminium parts can vary due to technical production reasons

Actuator, Front dimension Ø 35 mm

Switching action	Housing colour	Housing material	Operating Travel	Part No.	Wiring diagram
Momentary	Grey	Plastic	ca. 5.8 mm ± 0.2 mm	704.631.1	72
Maintained	Grey	Plastic	ca. 5.8 mm ± 0.2 mm	704.632.1	73

Wiring diagrams

Wiring diagram 72

Wiring diagram 73

04 Flush design

Illuminated pushbutton square, IP65

Product can differ from the current configuration.

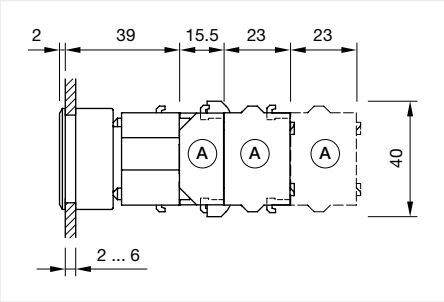

Dimensions [mm]
A = Screw terminal

General information

- Max. 3 switching elements can be clipped on
- The lamp block will be delivered with screw terminal

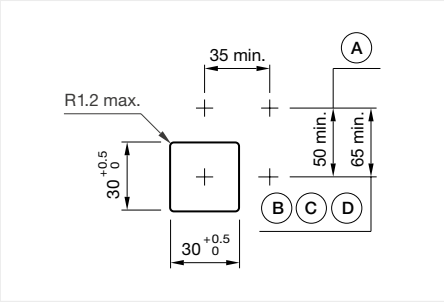

Mounting cut-outs [mm]
A = Screw terminal
B = Push-in terminal (PIT)
C = Plug-in terminal 6.3 mm x 0.8 mm
D = Double plug-in terminal 6.3 mm x 0.8 mm

Equipment consisting of (schematic overview)

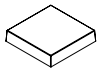
Lens

Lens holder

Actuator

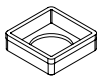
Press frame

Bayonet flange

LED Page 158

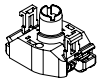
Lamp block

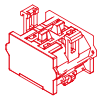
Switching element Page 167

Each Part Number listed below includes all the black components shown in the 3D-drawing.

To obtain a complete unit, please select the red components from the pages shown.

Actuator, Front dimension 35 mm x 35 mm

Switching action	Front bezel colour	Front bezel material	Lens colour	Lens material	Housing colour	Housing material	Operating Travel	Part No.	Wiring diagram
Momentary	Black	Plastic	Red	Plastic	Black	Plastic	ca. 5.8 mm ± 0.2 mm	704.229.200	74
	Black	Plastic	Yellow	Plastic	Black	Plastic	ca. 5.8 mm ± 0.2 mm	704.229.400	74
	Black	Plastic	Green	Plastic	Black	Plastic	ca. 5.8 mm ± 0.2 mm	704.229.500	74
	Black	Plastic	Blue	Plastic	Black	Plastic	ca. 5.8 mm ± 0.2 mm	704.229.600	74
	Black	Plastic	Colourless	Plastic	Black	Plastic	ca. 5.8 mm ± 0.2 mm	704.229.700	74
	Silver	Plastic	Red	Plastic	Black	Plastic	ca. 5.8 mm ± 0.2 mm	704.230.208	74
	Silver	Plastic	Yellow	Plastic	Black	Plastic	ca. 5.8 mm ± 0.2 mm	704.230.408	74
	Silver	Plastic	Green	Plastic	Black	Plastic	ca. 5.8 mm ± 0.2 mm	704.230.508	74
	Silver	Plastic	Blue	Plastic	Black	Plastic	ca. 5.8 mm ± 0.2 mm	704.230.608	74
	Silver	Plastic	Colourless	Plastic	Black	Plastic	ca. 5.8 mm ± 0.2 mm	704.230.708	74

Switching action	Front bezel colour	Front bezel material	Lens colour	Lens material	Housing colour	Housing material	Operating Travel	Part No.	Wiring diagram
Maintained	Black	Plastic	Red	Plastic	Black	Plastic	ca. 5.8 mm ± 0.2 mm	704.259.200	75
	Black	Plastic	Yellow	Plastic	Black	Plastic	ca. 5.8 mm ± 0.2 mm	704.259.400	75
	Black	Plastic	Green	Plastic	Black	Plastic	ca. 5.8 mm ± 0.2 mm	704.259.500	75
	Black	Plastic	Colourless	Plastic	Black	Plastic	ca. 5.8 mm ± 0.2 mm	704.259.700	75
	Silver	Plastic	Red	Plastic	Black	Plastic	ca. 5.8 mm ± 0.2 mm	704.260.208	75
	Silver	Plastic	Yellow	Plastic	Black	Plastic	ca. 5.8 mm ± 0.2 mm	704.260.408	75
	Silver	Plastic	Green	Plastic	Black	Plastic	ca. 5.8 mm ± 0.2 mm	704.260.508	75
	Silver	Plastic	Blue	Plastic	Black	Plastic	ca. 5.8 mm ± 0.2 mm	704.260.608	75
	Silver	Plastic	Colourless	Plastic	Black	Plastic	ca. 5.8 mm ± 0.2 mm	704.260.708	75

Wiring diagrams

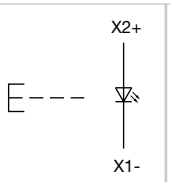

Wiring diagram 74

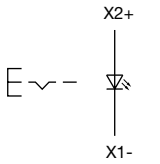

Wiring diagram 75

04 Flush design

Illuminated pushbutton round, IP65

Product can differ from the current configuration.

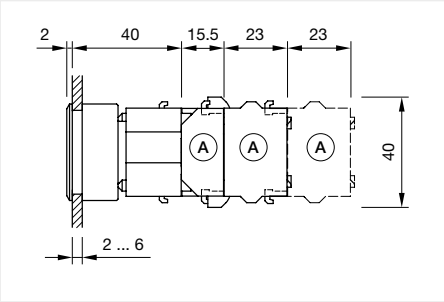

Dimensions [mm]
A = Screw terminal

General information

- Max. 3 switching elements can be clipped on
- The lamp block will be delivered with screw terminal
- The colour of anodised aluminium parts can vary due to technical production reasons

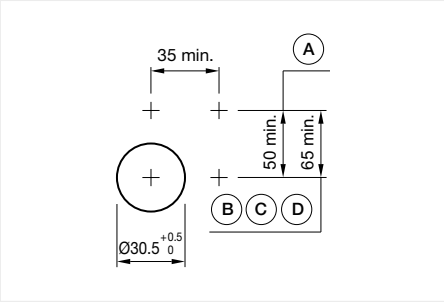

Mounting cut-outs [mm]
A = Screw terminal
B = Push-in terminal (PIT)
C = Plug-in terminal 6.3 mm x 0.8 mm
D = Double plug-in terminal 6.3 mm x 0.8 mm

Equipment consisting of (schematic overview)

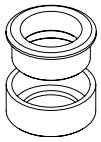
Front bezel set

Lens

Marking Plate

Actuator

Bayonet flange

LED Page 158

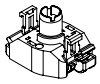
Lamp block

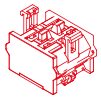
Switching element Page 167

Each Part Number listed below includes all the black components shown in the 3D-drawing.

To obtain a complete unit, please select the red components from the pages shown.

Actuator, Front dimension Ø 35 mm

Switching action	Front bezel colour	Front bezel material	Front bezel surface	Lens colour	Lens material	Housing colour	Housing material	Operating Travel	Part No.	Wiring diagram
Momentary	Nature	Aluminium	anodised	Red	Plastic	Grey	Plastic	ca. 5.8 mm ± 0.2 mm	704.032.218	74
	Nature	Aluminium	anodised	Yellow	Plastic	Grey	Plastic	ca. 5.8 mm ± 0.2 mm	704.032.418	74
	Nature	Aluminium	anodised	Green	Plastic	Grey	Plastic	ca. 5.8 mm ± 0.2 mm	704.032.518	74
	Nature	Aluminium	anodised	Blue	Plastic	Grey	Plastic	ca. 5.8 mm ± 0.2 mm	704.032.618	74
	Nature	Aluminium	anodised	Colourless	Plastic	Grey	Plastic	ca. 5.8 mm ± 0.2 mm	704.032.718	74
Maintained	Nature	Aluminium	anodised	Red	Plastic	Grey	Plastic	ca. 5.8 mm ± 0.2 mm	704.062.218	75
	Nature	Aluminium	anodised	Yellow	Plastic	Grey	Plastic	ca. 5.8 mm ± 0.2 mm	704.062.418	75
	Nature	Aluminium	anodised	Green	Plastic	Grey	Plastic	ca. 5.8 mm ± 0.2 mm	704.062.518	75
	Nature	Aluminium	anodised	Blue	Plastic	Grey	Plastic	ca. 5.8 mm ± 0.2 mm	704.062.618	75

Switching action	Front bezel colour	Front bezel material	Front bezel surface	Lens colour	Lens material	Housing colour	Housing material	Operating Travel	Part No.	Wiring diagram
Maintained	Nature	Aluminium	anodised	Colourless	Plastic	Grey	Plastic	ca. 5.8 mm ± 0.2 mm	704.062.718	75

Wiring diagrams

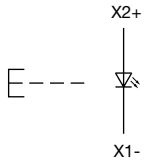

Wiring diagram 74

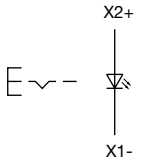

Wiring diagram 75

Illuminated pushbutton square, IP65

Product can differ from the current configuration.

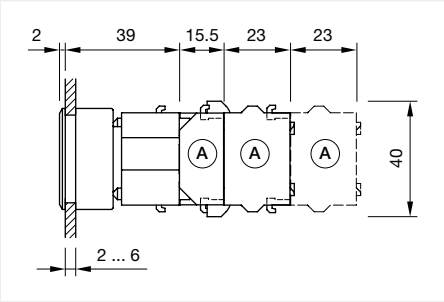

Dimensions [mm]
A = Screw terminal

General information

- Max. 3 switching elements can be clipped on

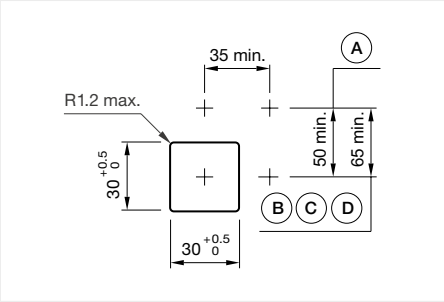

Mounting cut-outs [mm]
A = Screw terminal
B = Push-in terminal (PIT)
C = Plug-in terminal 6.3 mm x 0.8 mm
D = Double plug-in terminal 6.3 mm x 0.8 mm

Equipment consisting of (schematic overview)

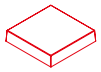
Lens Page 153

Lens holder Page 155

Actuator

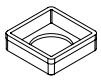
Press frame

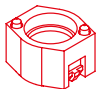
Bayonet flange Page 157

LED Page 158

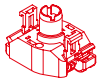
Lamp block Page 164

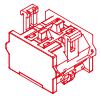
Switching element Page 167

Each Part Number listed below includes all the black components shown in the 3D-drawing.

To obtain a complete unit, please select the red components from the pages shown.

Actuator, Front dimension 35 mm x 35 mm

Switching action	Front bezel colour	Front bezel material	Housing colour	Housing material	Operating Travel	Part No.	Wiring diagram
Momentary	Black	Plastic	Black	Plastic	ca. 5.8 mm ± 0.2 mm	704.741.0	72
	Silver	Plastic	Black	Plastic	ca. 5.8 mm ± 0.2 mm	704.741.8	72
Maintained	Black	Plastic	Black	Plastic	ca. 5.8 mm ± 0.2 mm	704.742.0	73
	Silver	Plastic	Black	Plastic	ca. 5.8 mm ± 0.2 mm	704.742.8	73

Wiring diagrams

Wiring diagram 72	Wiring diagram 73

04 Flush design

Illuminated pushbutton round, IP65

Product can differ from the current configuration.

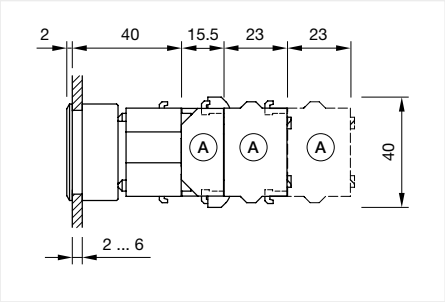

Dimensions [mm]
A = Screw terminal

General information

- Max. 3 switching elements can be clipped on
- The colour of anodised aluminium parts can vary due to technical production reasons

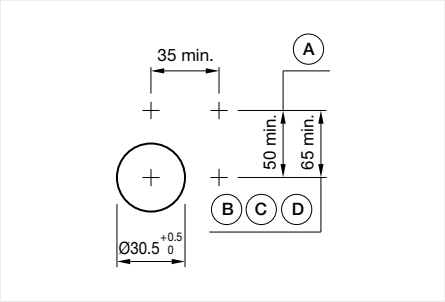

Mounting cut-outs [mm]
A = Screw terminal
B = Push-in terminal (PIT)
C = Plug-in terminal 6.3 mm x 0.8 mm
D = Double plug-in terminal 6.3 mm x 0.8 mm

Equipment consisting of (schematic overview)

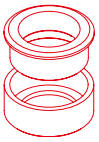
Front bezel set Page 156

Lens Page 153

Marking Plate Page 155

Actuator

Bayonet flange Page 157

LED Page 158

Lamp block Page 164

Switching element Page 167

Each Part Number listed below includes all the black components shown in the 3D-drawing.

To obtain a complete unit, please select the red components from the pages shown.

Actuator, Front dimension Ø 35 mm

Switching action	Housing colour	Housing material	Operating Travel	Part No.	Wiring diagram
Momentary	Grey	Plastic	ca. 5.8 mm ± 0.2 mm	704.631.1	72
Maintained	Grey	Plastic	ca. 5.8 mm ± 0.2 mm	704.632.1	73

Wiring diagrams

Wiring diagram 72

Wiring diagram 73

Mushroom-head pushbutton, IP65

Equipment consisting of (schematic overview)

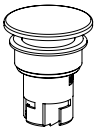

Actuator

Pressure ring

Bayonet flange

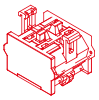

Switching element Page 167

Each Part Number listed below includes all the black components shown in the 3D-drawing.

To obtain a complete unit, please select the red components from the pages shown.

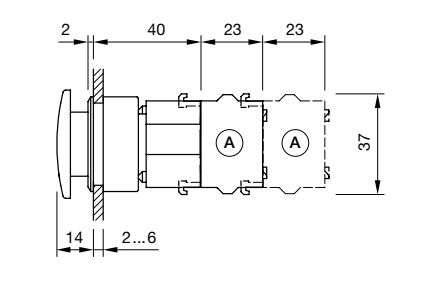

Dimensions [mm]
A = Screw terminal

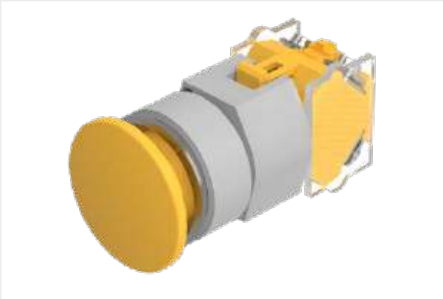

Product can differ from the current configuration.

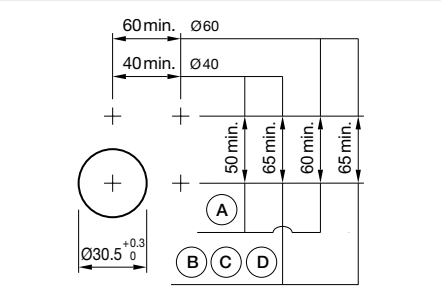

Mounting cut-outs [mm]
A = Screw terminal
B = Push-in terminal (PIT)
C = Plug-in terminal 6.3 mm x 0.8 mm
D = Double plug-in terminal 6.3 mm x 0.8 mm

General information

- Max. 3 switching elements can be clipped on
- The colour of anodised aluminium parts can vary due to technical production reasons

Actuator, Front dimension Ø 40 mm

Switching action	Front bezel colour	Front bezel material	Front bezel surface	Lens colour	Lens material	Housing colour	Housing material	Operating Travel	Part No.	Wiring diagram
Momentary	Black	Aluminium	anodised	Red	Plastic	Grey	Plastic	ca. 5.8 mm ± 0.2 mm	704.071.210	77
	Nature	Aluminium	anodised	Red	Plastic	Grey	Plastic	ca. 5.8 mm ± 0.2 mm	704.071.218	77
	Black	Aluminium	anodised	Yellow	Plastic	Grey	Plastic	ca. 5.8 mm ± 0.2 mm	704.071.410	77
	Nature	Aluminium	anodised	Yellow	Plastic	Grey	Plastic	ca. 5.8 mm ± 0.2 mm	704.071.418	77

Wiring diagrams

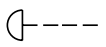

Wiring diagram 77

Selector switch illuminated, 2 positions, short lever, square, IP65

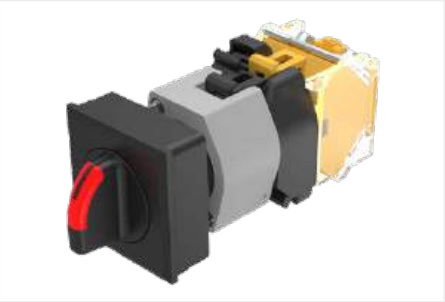

Product can differ from the current configuration.

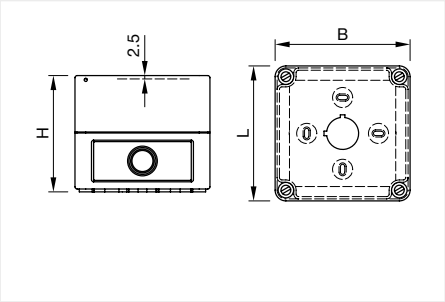

Dimensions [mm]
A = Screw terminal

General information

- Max. 3 switching elements can be clipped on

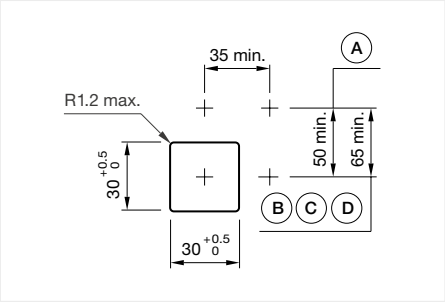

Mounting cut-outs [mm]
A = Screw terminal
B = Push-in terminal (PIT)
C = Plug-in terminal 6.3 mm x 0.8 mm
D = Double plug-in terminal 6.3 mm x 0.8 mm

Equipment consisting of (schematic overview)

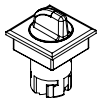
Actuator

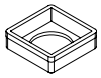
Press frame

Bayonet flange

LED Page 158

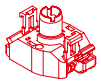
Lamp block Page 164

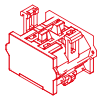
Switching element Page 167

Each Part Number listed below includes all the black components shown in the 3D-drawing.

To obtain a complete unit, please select the red components from the pages shown.

Actuator, Front dimension 35 mm x 35 mm

Switching action	Front bezel colour	Front bezel material	Switching angle	Part No.	Wiring diagram
Rest - Maintained	Black	Plastic	90° right	704.510.000I	85
	Silver	Plastic	90° right	704.510.008I	85

Wiring diagrams

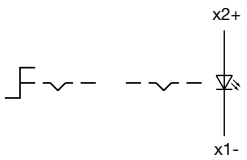

Wiring diagram 85

Selector switch illuminated 2 positions short lever, round, IP65

Equipment consisting of (schematic overview)

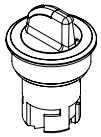
Actuator

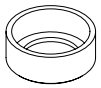
Pressure ring

Bayonet flange

LED Page 158

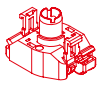
Lamp block Page 164

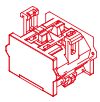
Switching element Page 167

Each Part Number listed below includes all the black components shown in the 3D-drawing.

To obtain a complete unit, please select the red components from the pages shown.

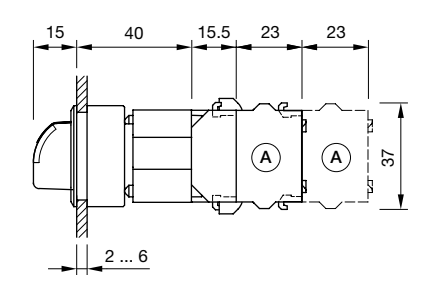

Dimensions [mm]
X = Screw terminal

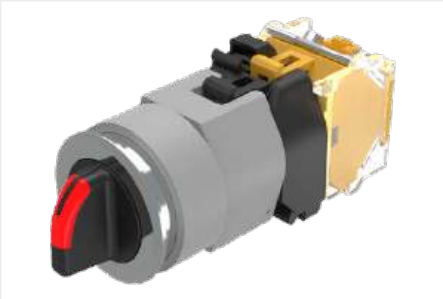

Product can differ from the current configuration.

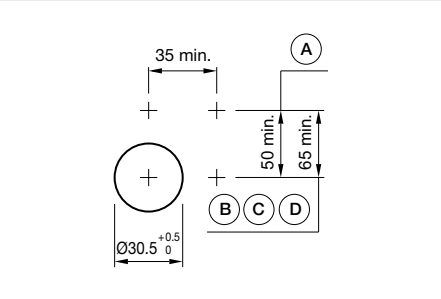

Mounting cut-outs [mm]
A = Screw terminal
B = Push-in terminal (PIT)
C = Plug-in terminal 6.3 mm x 0.8 mm
D = Double plug-in terminal 6.3 mm x 0.8 mm

General information

- Max. 3 switching elements can be clipped on
- The colour of anodised aluminium parts can vary due to technical production reasons

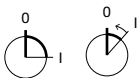

Actuator, Front dimension Ø 35 mm

Switching action	Front bezel colour	Front bezel material	Switching angle	Front bezel surface	Part No.	Wiring diagram
Rest - Maintained	Black	Aluminium	90° right	anodised	704.411.010I	85
	Nature	Aluminium	90° right	anodised	704.411.018I	85
Rest - Momentary	Black	Aluminium	42° right	anodised	704.413.010I	84
	Nature	Aluminium	42° right	anodised	704.413.018I	84

Wiring diagrams

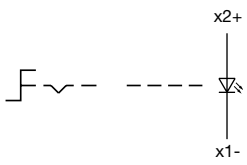

Wiring diagram 84

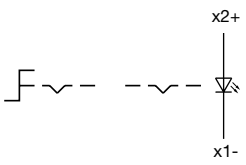

Wiring diagram 85

04 Flush design

Selector switch 2 positions short lever, square, IP65

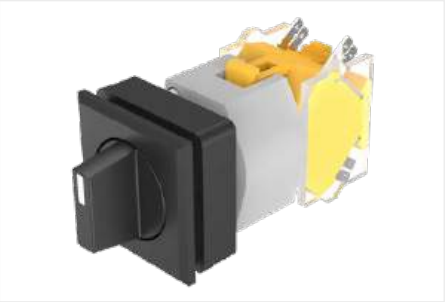

Product can differ from the current configuration.

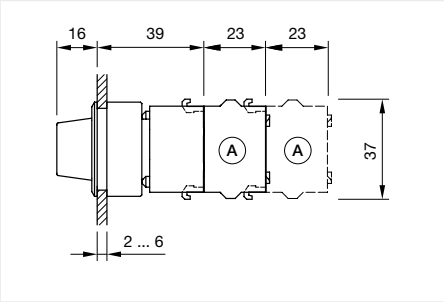

Dimensions [mm]
A = Screw terminal

General information

- Max. 3 switching elements can be clipped on

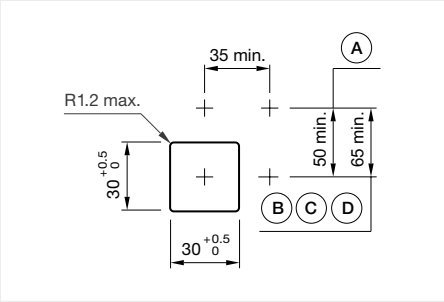

Mounting cut-outs [mm]
A = Screw terminal
B = Push-in terminal (PIT)
C = Plug-in terminal 6.3 mm x 0.8 mm
D = Double plug-in terminal 6.3 mm x 0.8 mm

Equipment consisting of (schematic overview)

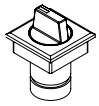

Actuator

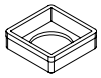

Press frame

Bayonet flange

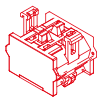

Switching element Page 167

Each Part Number listed below includes all the black components shown in the 3D-drawing.

To obtain a complete unit, please select the red components from the pages shown.

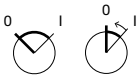

Actuator, Front dimension 35 mm x 35 mm

Switching action	Front bezel colour	Front bezel material	Switching angle	Part No.	Wiring diagram
Rest - Maintained	Black	Plastic	90° right / -45° … +45°	704.510.000	87
	Silver	Plastic	90° right / -45° … +45°	704.510.008	87
Rest - Momentary	Black	Plastic	42° right	704.512.000	86

Wiring diagrams

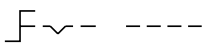

Wiring diagram 86

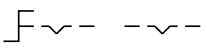

Wiring diagram 87

Selector switch 2 positions, short lever, round, IP65

Equipment consisting of (schematic overview)

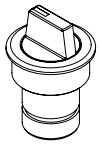
Actuator

Pressure ring

Bayonet flange

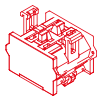
Switching element Page 167

Each Part Number listed below includes all the black components shown in the 3D-drawing.

To obtain a complete unit, please select the red components from the pages shown.

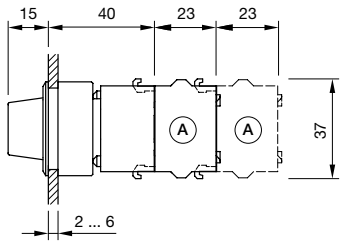

Dimensions [mm]
A = Screw terminal

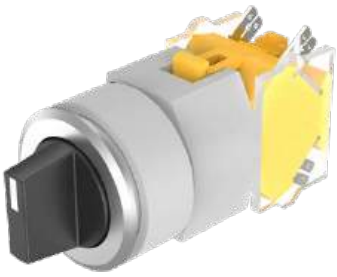

Product can differ from the current configuration.

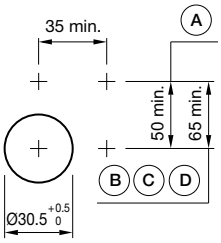

Mounting cut-outs [mm]
A = Screw terminal
B = Push-in terminal (PIT)
C = Plug-in terminal 6.3 mm x 0.8 mm
D = Double plug-in terminal 6.3 mm x 0.8 mm

General information

- Max. 3 switching elements can be clipped on
- The colour of anodised aluminium parts can vary due to technical production reasons

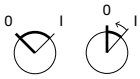

Actuator, Front dimension Ø 35 mm

Switching action	Front bezel colour	Front bezel material	Switching angle	Front bezel surface	Part No.	Wiring diagram
Rest - Maintained	Black	Aluminium	90° right / -45° … +45°	anodised	704.411.010	87
	Nature	Aluminium	90° right / -45° … +45°	anodised	704.411.018	87
Rest - Momentary	Black	Aluminium	42° right	anodised	704.413.010	86
	Nature	Aluminium	42° right	anodised	704.413.018	86

Wiring diagrams

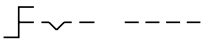
Wiring diagram 86

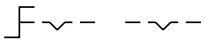
Wiring diagram 87

04 Flush design

Selector switch 2 positions, short lever, square, IP65

Product can differ from the current configuration.

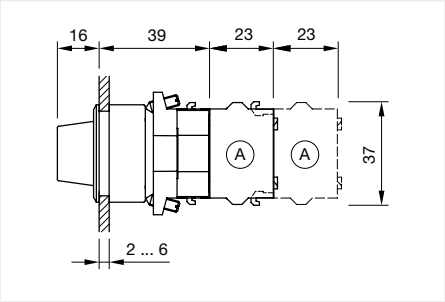

Dimensions [mm]
A = Screw terminal

General information

- Max. 3 switching elements can be clipped on

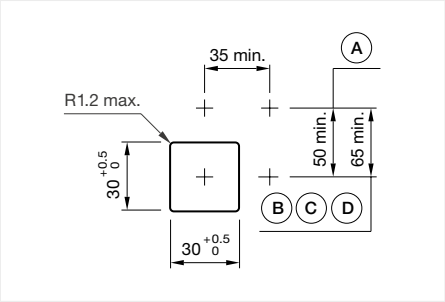

Mounting cut-outs [mm]
A = Screw terminal
B = Push-in terminal (PIT)
C = Plug-in terminal 6.3 mm x 0.8 mm
D = Double plug-in terminal 6.3 mm x 0.8 mm

Equipment consisting of (schematic overview)

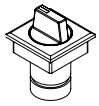

Actuator

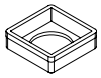

Press frame

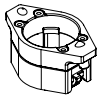

Bayonet flange

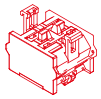

Switching element Page 167

Each Part Number listed below includes all the black components shown in the 3D-drawing.

To obtain a complete unit, please select the red components from the pages shown.

Actuator, Front dimension 35 mm x 35 mm

Switching action	Front bezel colour	Front bezel material	Switching angle	Part No.	Wiring diagram
Rest - Maintained	Black	Plastic	90° right	704.510.000.12	87

Wiring diagrams

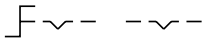

Wiring diagram 87

Selector switch 2 positions, short lever, round, IP65

Equipment consisting of (schematic overview)

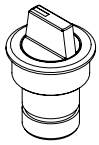
Actuator

Pressure ring

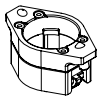
Bayonet flange

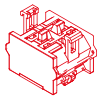
Switching element Page 167

Each Part Number listed below includes all the black components shown in the 3D-drawing.

To obtain a complete unit, please select the red components from the pages shown.

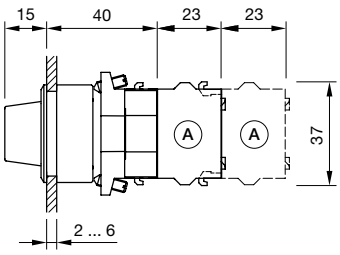

Dimensions [mm]
X = Screw terminal

Product can differ from the current configuration.

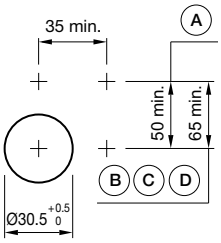

Mounting cut-outs [mm]
A = Screw terminal
B = Push-in terminal (PIT)
C = Plug-in terminal 6.3 mm x 0.8 mm
D = Double plug-in terminal 6.3 mm x 0.8 mm

General information

- Max. 3 switching elements can be clipped on
- The colour of anodised aluminium parts can vary due to technical production reasons

Actuator, Front dimension Ø 35 mm

Switching action	Front bezel colour	Front bezel material	Switching angle	Front bezel surface	Part No.	Wiring diagram
Rest - Maintained	Black	Aluminium	90° right	anodised	704.411.010.12	87
	Nature	Aluminium	90° right	anodised	704.411.018.12	87

Wiring diagrams

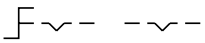

Wiring diagram 87

Selector switch illuminated, 2 positions, long lever, square, IP65

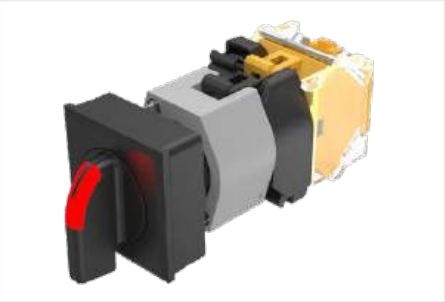

Product can differ from the current configuration.

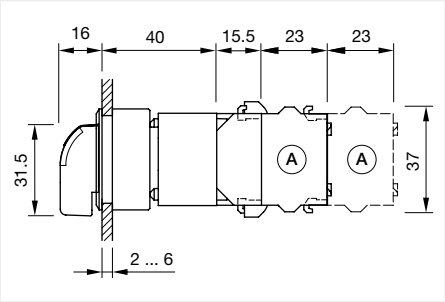

Dimensions [mm]
A = Screw terminal

General information

- Max. 3 switching elements can be clipped on

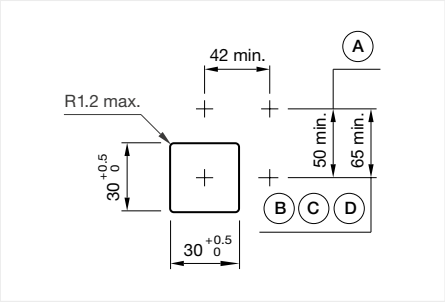

Mounting cut-outs [mm]
A = Screw terminal
B = Push-in terminal (PIT)
C = Plug-in terminal 6.3 mm x 0.8 mm
D = Double plug-in terminal 6.3v x 0.8 mm

Equipment consisting of (schematic overview)

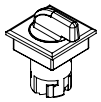
Actuator

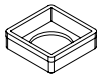
Press frame

Bayonet flange

LED Page 158

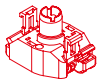
Lamp block Page 164

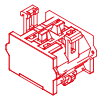
Switching element Page 167

Each Part Number listed below includes all the black components shown in the 3D-drawing.

To obtain a complete unit, please select the red components from the pages shown.

Actuator, Front dimension 35 mm x 35 mm

Switching action	Front bezel colour	Front bezel material	Switching angle	Part No.	Wiring diagram
Rest - Maintained	Black	Plastic	90° right	704.300.000I	85

Wiring diagrams

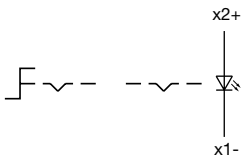

Wiring diagram 85

Selector switch illuminated, 2 positions, long lever, round, IP65

Equipment consisting of (schematic overview)

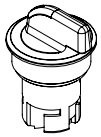
Actuator

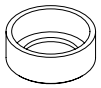
Pressure ring

Bayonet flange

LED Page 158

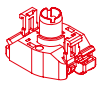
Lamp block Page 164

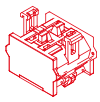
Switching element Page 167

Each Part Number listed below includes all the black components shown in the 3D-drawing.

To obtain a complete unit, please select the red components from the pages shown.

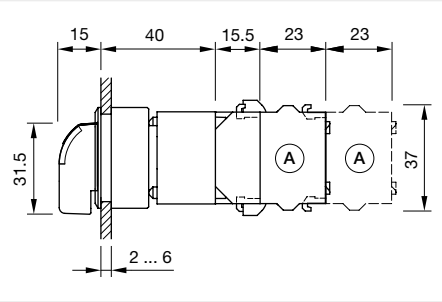

Dimensions [mm]
A = Screw terminal

Product can differ from the current configuration.

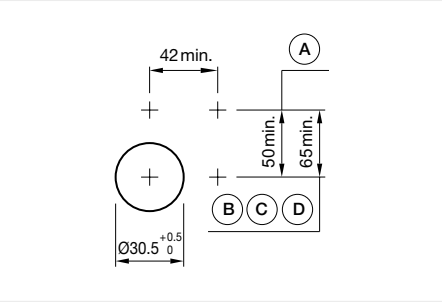

Mounting cut-outs [mm]
A = Screw terminal
B = Push-in terminal (PIT)
C = Plug-in terminal 6.3 mm x 0.8 mm
D = Double plug-in terminal 6.3 mm x 0.8 mm

General information

- Max. 3 switching elements can be clipped on
- The colour of anodised aluminium parts can vary due to technical production reasons

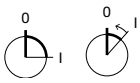

Actuator, Front dimension Ø 35 mm

Switching action	Front bezel colour	Front bezel material	Switching angle	Front bezel surface	Part No.	Wiring diagram
Rest - Maintained	Black	Aluminium	90° right	anodised	704.101.010I	85
	Nature	Aluminium	90° right	anodised	704.101.018I	85
Rest - Momentary	Nature	Aluminium	42° right	anodised	704.103.018I	84

Wiring diagrams

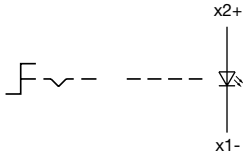

Wiring diagram 84

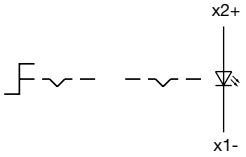

Wiring diagram 85

04 Flush design

Selector switch 2 positions, long lever, square, IP65

Product can differ from the current configuration.

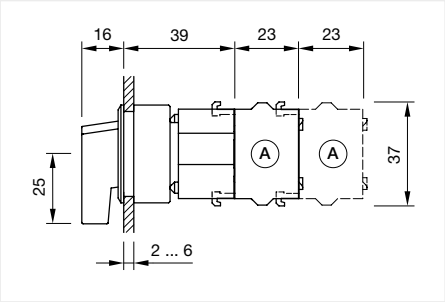

Dimensions [mm]
A = Screw terminal

General information

- Max. 3 switching elements can be clipped on

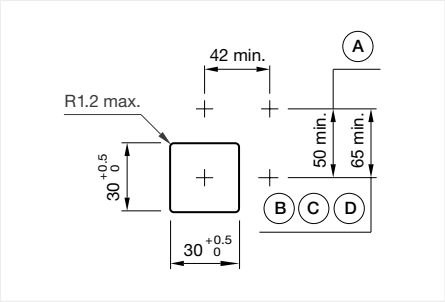

Mounting cut-outs [mm]
A = Screw terminal
B = Push-in terminal (PIT)
C = Plug-in terminal 6.3 mm x 0.8 mm
D = Double plug-in terminal 6.3v x 0.8 mm

Equipment consisting of (schematic overview)

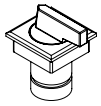

Actuator

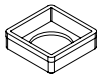

Press frame

Bayonet flange

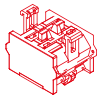

Switching element Page 167

Each Part Number listed below includes all the black components shown in the 3D-drawing.

To obtain a complete unit, please select the red components from the pages shown.

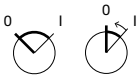

Actuator, Front dimension 35 mm x 35 mm

Switching action	Front bezel colour	Front bezel material	Switching angle	Part No.	Wiring diagram
Rest - Maintained	Black	Plastic	90° right / -45° … +45°	704.300.000	87
	Silver	Plastic	90° right / -45° … +45°	704.300.008	87
Rest - Momentary	Black	Plastic	42° right	704.302.000	86

Wiring diagrams

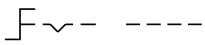

Wiring diagram 86

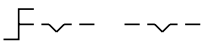

Wiring diagram 87

Selector switch 2 positions, long lever, round, IP65

Equipment consisting of (schematic overview)

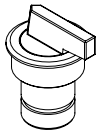
Actuator

Pressure ring

Bayonet flange

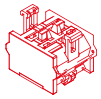
Switching element Page 167

Each Part Number listed below includes all the black components shown in the 3D-drawing.

To obtain a complete unit, please select the red components from the pages shown.

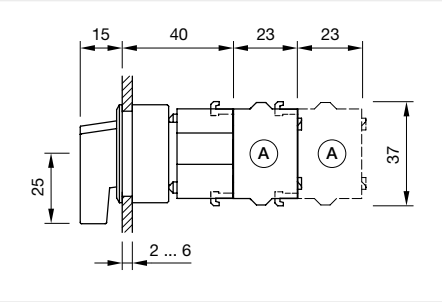

Dimensions [mm]
A = Screw terminal

Product can differ from the current configuration.

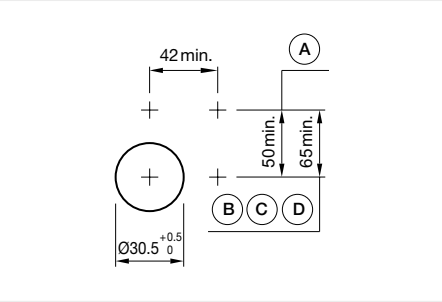

Mounting cut-outs [mm]
A = Screw terminal
B = Push-in terminal (PIT)
C = Plug-in terminal 6.3 mm x 0.8 mm
D = Double plug-in terminal 6.3 mm x 0.8 mm

General information

- Max. 3 switching elements can be clipped on
- The colour of anodised aluminium parts can vary due to technical production reasons

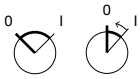

Actuator, Front dimension Ø 35 mm

Switching action	Front bezel colour	Front bezel material	Switching angle	Front bezel surface	Part No.	Wiring diagram
Rest - Maintained	Black	Aluminium	90° right / -45° … +45°	anodised	704.101.010	87
	Nature	Aluminium	90° right / -45° … +45°	anodised	704.101.018	87
Rest - Momentary	Nature	Aluminium	42° right	anodised	704.103.018	86

Wiring diagrams

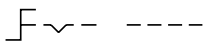
Wiring diagram 86

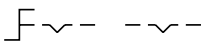
Wiring diagram 87

04 Flush design

Selector switch 2 positions, 12 o'clock, long lever, square, IP65

Product can differ from the current configuration.

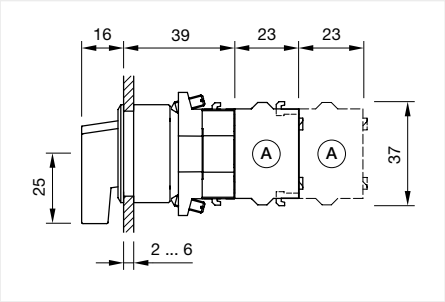

Dimensions [mm]
A = Screw terminal

General information

- Max. 3 switching elements can be clipped on

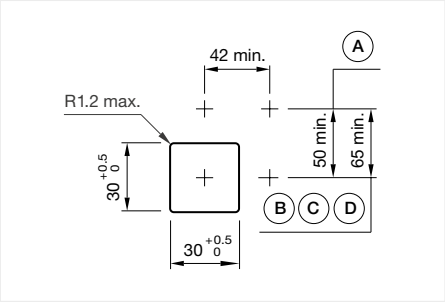

Mounting cut-outs [mm]
A = Screw terminal
B = Push-in terminal (PIT)
C = Plug-in terminal 6.3 mm x 0.8 mm
D = Double plug-in terminal 6.3v x 0.8 mm

Equipment consisting of (schematic overview)

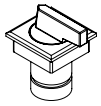

Actuator

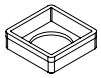

Press frame

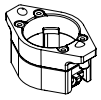

Bayonet flange

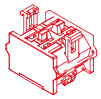

Switching element Page 167

Each Part Number listed below includes all the black components shown in the 3D-drawing.

To obtain a complete unit, please select the red components from the pages shown.

Actuator, Front dimension 35 mm x 35 mm

Switching action	Front bezel colour	Front bezel material	Switching angle	Part No.	Wiring diagram
Rest - Maintained	Black	Plastic	90° right	704.300.000.12	87

Wiring diagrams

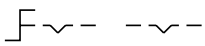

Wiring diagram 87

Selector switch 2 positions, long lever, round, IP65

Equipment consisting of (schematic overview)

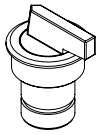
Actuator

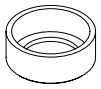
Pressure ring

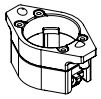
Bayonet flange

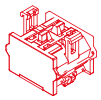
Switching element Page 167

Each Part Number listed below includes all the black components shown in the 3D-drawing.

To obtain a complete unit, please select the red components from the pages shown.

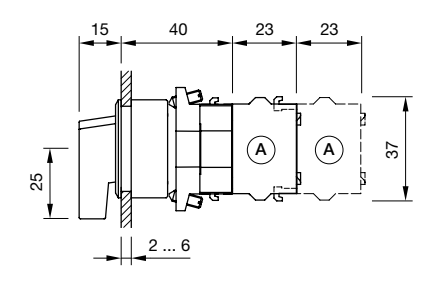

Dimensions [mm]
A = Screw terminal

Product can differ from the current configuration.

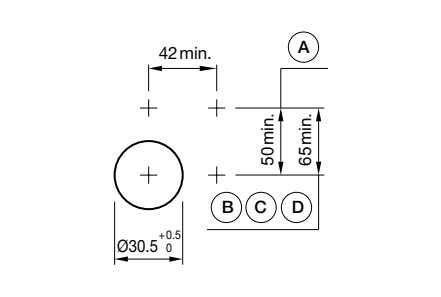

Mounting cut-outs [mm]
A = Screw terminal
B = Push-in terminal (PIT)
C = Plug-in terminal 6.3 mm x 0.8 mm
D = Double plug-in terminal 6.3 mm x 0.8 mm

General information

- Max. 3 switching elements can be clipped on
- The colour of anodised aluminium parts can vary due to technical production reasons

Actuator, Front dimension Ø 35 mm

Switching action	Front bezel colour	Front bezel material	Switching angle	Front bezel surface	Part No.	Wiring diagram
Rest - Maintained	Black	Aluminium	90° right	anodised	704.101.010.12	87
	Nature	Aluminium	90° right	anodised	704.101.018.12	87

Wiring diagrams

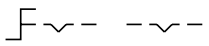

Wiring diagram 87

Selector switch illuminated, 3 positions, short lever, square, IP65

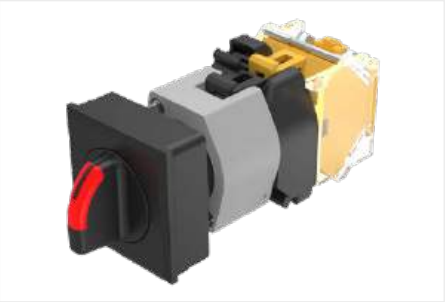

Product can differ from the current configuration.

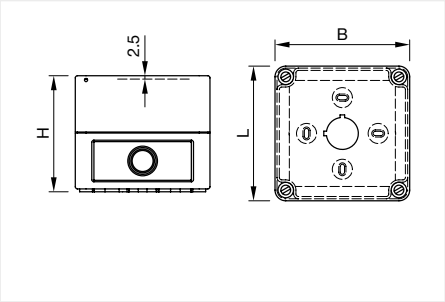

Dimensions [mm]
A = Screw terminal

General information

- Max. 3 switching elements can be clipped on

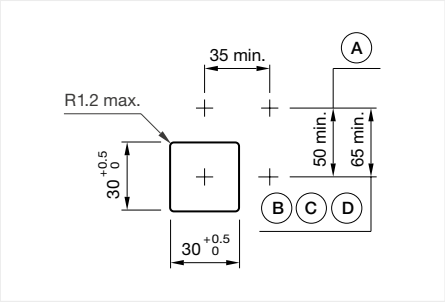

Mounting cut-outs [mm]
A = Screw terminal
B = Push-in terminal (PIT)
C = Plug-in terminal 6.3 mm x 0.8 mm
D = Double plug-in terminal 6.3 mm x 0.8 mm

Equipment consisting of (schematic overview)

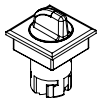

Actuator

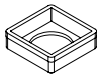

Press frame

Bayonet flange

LED Page 158

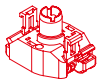

Lamp block Page 164

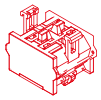

Switching element Page 167

Each Part Number listed below includes all the black components shown in the 3D-drawing.

To obtain a complete unit, please select the red components from the pages shown.

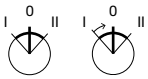

Actuator, Front dimension 35 mm x 35 mm

Switching action	Front bezel colour	Front bezel material	Switching angle	Part No.	Wiring diagram
Maintained - Rest - Maintained	Black	Plastic	42° left / 42° right	704.502.000I	91

Wiring diagrams

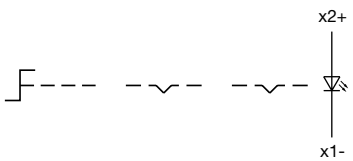

Wiring diagram 88

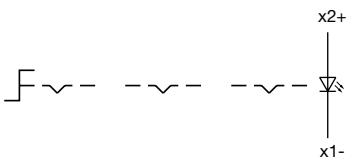

Wiring diagram 91

Selector switch illuminated, 3 positions, short lever, round, IP65

Equipment consisting of (schematic overview)

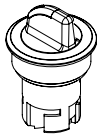
Actuator

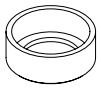
Pressure ring

Bayonet flange

LED Page 158

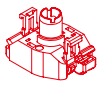
Lamp block Page 164

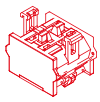
Switching element Page 167

Each Part Number listed below includes all the black components shown in the 3D-drawing.

To obtain a complete unit, please select the red components from the pages shown.

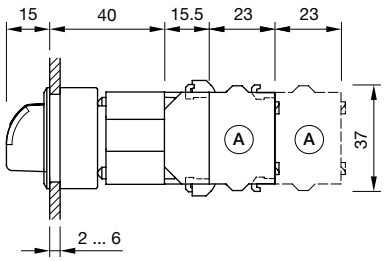

Dimensions [mm]
X = Screw terminal

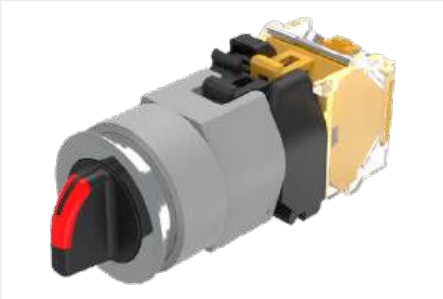

Product can differ from the current configuration.

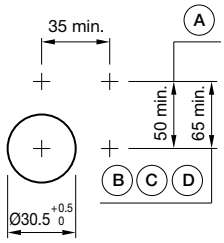

Mounting cut-outs [mm]
A = Screw terminal
B = Push-in terminal (PIT)
C = Plug-in terminal 6.3 mm x 0.8 mm
D = Double plug-in terminal 6.3 mm x 0.8 mm

General information

- Max. 3 switching elements can be clipped on
- The colour of anodised aluminium parts can vary due to technical production reasons

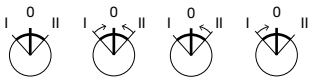

Actuator, Front dimension Ø 35 mm

Switching action	Front bezel colour	Front bezel material	Switching angle	Front bezel surface	Part No.	Wiring diagram
Maintained - Rest - Maintained	Black	Aluminium	42° left / 42° right	anodised	704.403.010I	91
	Nature	Aluminium	42° left / 42° right	anodised	704.403.018I	91
Momentary - Rest - Momentary	Black	Aluminium	42° left / 42° right	anodised	704.405.010I	90
	Nature	Aluminium	42° left / 42° right	anodised	704.405.018I	90
Maintained - Rest - Momentary	Nature	Aluminium	42° left / 42° right	anodised	704.407.018I	89
Momentary - Rest - Maintained	Nature	Aluminium	42° left / 42° right	anodised	704.409.018I	88

Wiring diagrams

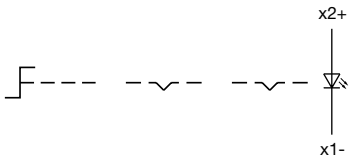

Wiring diagram 88

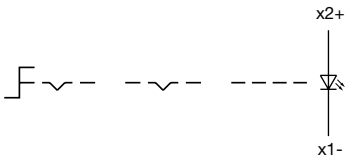

Wiring diagram 89

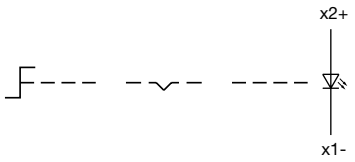

Wiring diagram 90

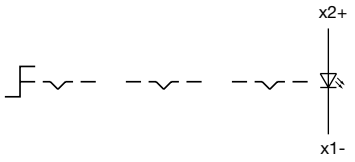

Wiring diagram 91

Wiring diagrams

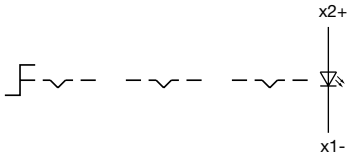

Wiring diagram 91

Selector switch 3 positions, short lever, square, IP65

Equipment consisting of (schematic overview)

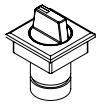
Actuator

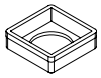
Press frame

Bayonet flange

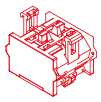
Switching element Page 167

Each Part Number listed below includes all the black components shown in the 3D-drawing.

To obtain a complete unit, please select the red components from the pages shown.

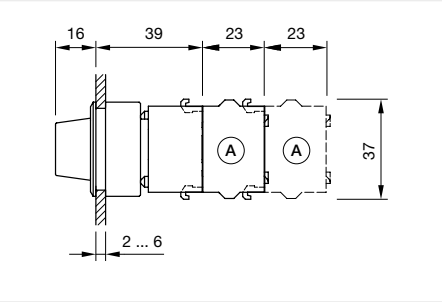

Dimensions [mm]
A = Screw terminal

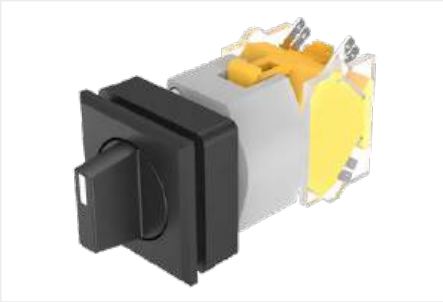

Product can differ from the current configuration.

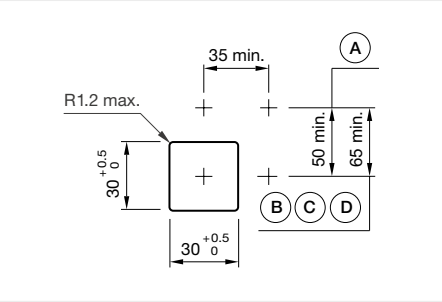

Mounting cut-outs [mm]
A = Screw terminal
B = Push-in terminal (PIT)
C = Plug-in terminal 6.3 mm x 0.8 mm
D = Double plug-in terminal 6.3 mm x 0.8 mm

General information

- Max. 3 switching elements can be clipped on

Actuator, Front dimension 35 mm x 35 mm

Switching action	Front bezel colour	Front bezel material	Switching angle	Part No.	Wiring diagram
Maintained - Rest - Maintained	Black	Plastic	42° left / 42° right	704.502.000	95
	Silver	Plastic	42° left / 42° right	704.502.008	95
Momentary - Rest - Momentary	Black	Plastic	42° left / 42° right	704.504.000	94
	Silver	Plastic	42° left / 42° right	704.504.008	94
Momentary - Rest - Maintained	Black	Plastic	42° left / 42° right	704.508.000	92

Wiring diagrams

Wiring diagram 92

Wiring diagram 94

Wiring diagram 95

Selector switch 3 positions, short lever, round, IP65

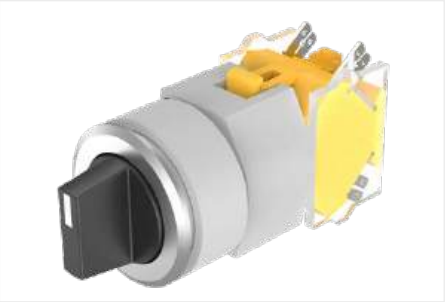

Product can differ from the current configuration.

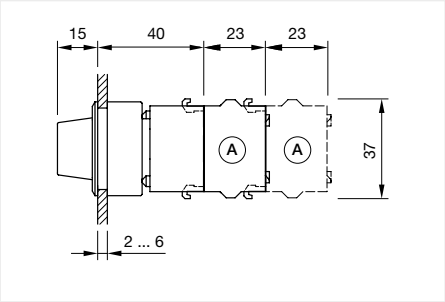

Dimensions [mm]
A = Screw terminal

General information

- Max. 3 switching elements can be clipped on
- The colour of anodised aluminium parts can vary due to technical production reasons

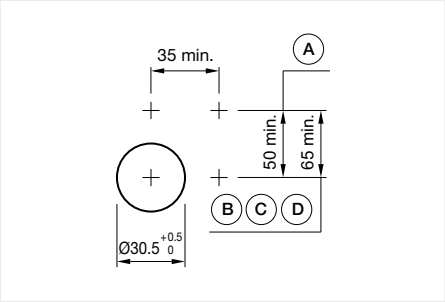

Mounting cut-outs [mm]
A = Screw terminal
B = Push-in terminal (PIT)
C = Plug-in terminal 6.3 mm x 0.8 mm
D = Double plug-in terminal 6.3 mm x 0.8 mm

Equipment consisting of (schematic overview)

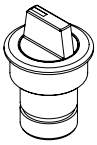

Actuator

Pressure ring

Bayonet flange

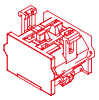

Switching element Page 167

Each Part Number listed below includes all the black components shown in the 3D-drawing.

To obtain a complete unit, please select the red components from the pages shown.

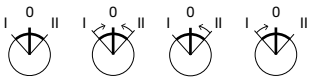

Actuator, Front dimension Ø 35 mm

Switching action	Front bezel colour	Front bezel material	Switching angle	Front bezel surface	Part No.	Wiring diagram
Maintained - Rest - Maintained	Black	Aluminium	42° left / 42° right	anodised	704.403.010	95
	Nature	Aluminium	42° left / 42° right	anodised	704.403.018	95
Momentary - Rest - Momentary	Black	Aluminium	42° left / 42° right	anodised	704.405.010	94
	Nature	Aluminium	42° left / 42° right	anodised	704.405.018	94
Maintained - Rest - Momentary	Black	Aluminium	42° left / 42° right	anodised	704.407.010	93
	Nature	Aluminium	42° left / 42° right	anodised	704.407.018	93
Momentary - Rest - Maintained	Black	Aluminium	42° left / 42° right	anodised	704.409.010	92
	Nature	Aluminium	42° left / 42° right	anodised	704.409.018	92

Wiring diagrams

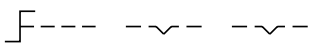

Wiring diagram 92

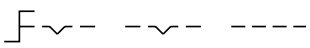

Wiring diagram 93

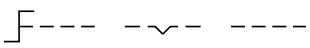

Wiring diagram 94

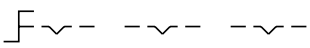

Wiring diagram 95

Selector switch illuminated, 3 positions, long lever, square, IP65

Equipment consisting of (schematic overview)

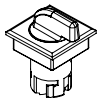
Actuator

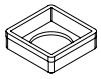
Press frame

Bayonet flange

LED Page 158

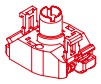
Lamp block Page 164

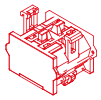
Switching element Page 167

Each Part Number listed below includes all the black components shown in the 3D-drawing.

To obtain a complete unit, please select the red components from the pages shown.

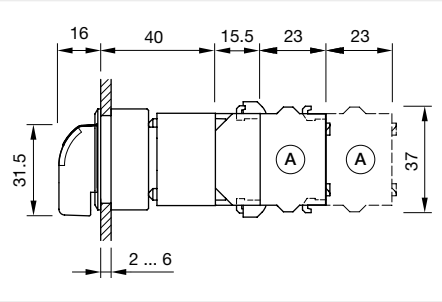

Dimensions [mm]
A = Screw terminal

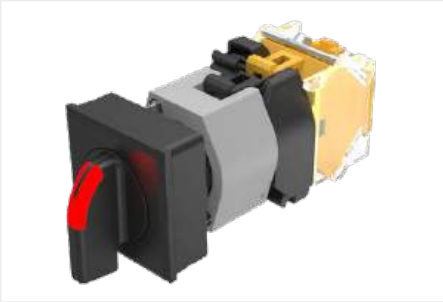

Product can differ from the current configuration.

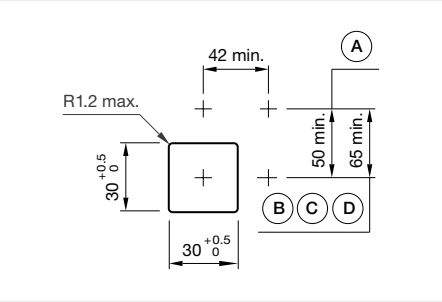

Mounting cut-outs [mm]
A = Screw terminal
B = Push-in terminal (PIT)
C = Plug-in terminal 6.3 mm x 0.8 mm
D = Double plug-in terminal 6.3v x 0.8 mm

General information

- Max. 3 switching elements can be clipped on

Actuator, Front dimension 35 mm x 35 mm

Switching action	Front bezel colour	Front bezel material	Switching angle	Part No.	Wiring diagram
Maintained - Rest - Maintained	Black	Plastic	42° left / 42° right	704.292.000I	91

Wiring diagrams

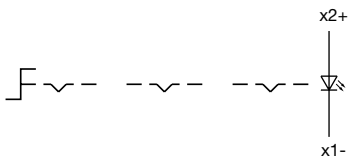

Wiring diagram 91

Selector switch illuminated, 3 positions long lever, round, IP65

Product can differ from the current configuration.

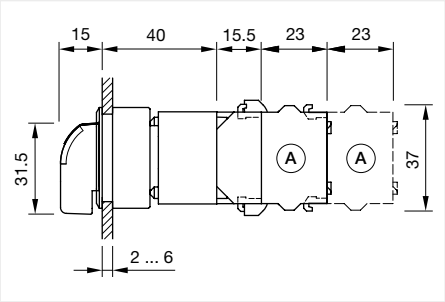

Dimensions [mm]
A = Screw terminal

General information

- Max. 3 switching elements can be clipped on
- The colour of anodised aluminium parts can vary due to technical production reasons

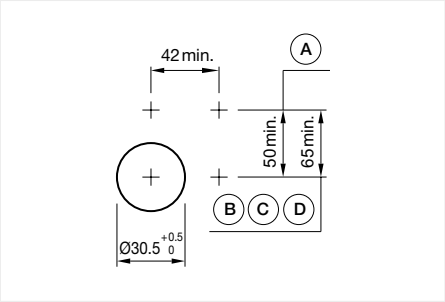

Mounting cut-outs [mm]
A = Screw terminal
B = Push-in terminal (PIT)
C = Plug-in terminal 6.3 mm x 0.8 mm
D = Double plug-in terminal 6.3 mm x 0.8 mm

Equipment consisting of (schematic overview)

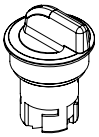
Actuator

Pressure ring

Bayonet flange

LED Page 158

Lamp block Page 164

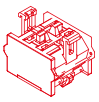
Switching element Page 167

Each Part Number listed below includes all the black components shown in the 3D-drawing.

To obtain a complete unit, please select the red components from the pages shown.

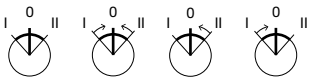

Actuator, Front dimension Ø 35 mm

Switching action	Front bezel colour	Front bezel material	Switching angle	Front bezel surface	Part No.	Wiring diagram
Maintained - Rest - Maintained	Black	Aluminium	42° left / 42° right	anodised	704.093.010I	91
	Nature	Aluminium	42° left / 42° right	anodised	704.093.018I	91
Momentary - Rest - Momentary	Black	Aluminium	42° left / 42° right	anodised	704.095.010I	90
	Nature	Aluminium	42° left / 42° right	anodised	704.095.018I	90
Maintained - Rest - Momentary	Black	Aluminium	42° left / 42° right	anodised	704.097.010I	89
	Nature	Aluminium	42° left / 42° right	anodised	704.097.018I	89
Momentary - Rest - Maintained	Nature	Aluminium	42° left / 42° right	anodised	704.099.018I	88

Wiring diagrams

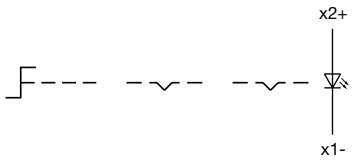

Wiring diagram 88

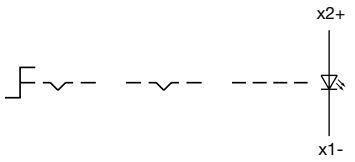

Wiring diagram 89

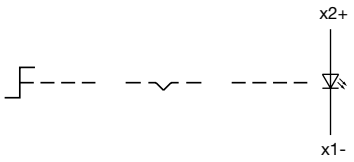

Wiring diagram 90

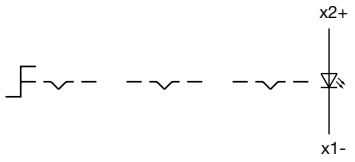

Wiring diagram 91

Selector switch 3 positions, long lever, quare, IP65

Product can differ from the current configuration.

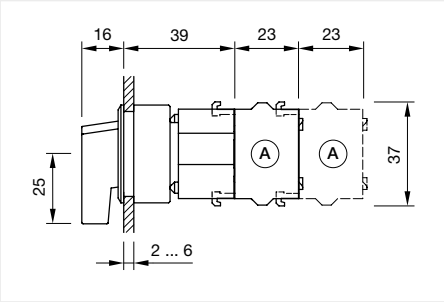

Dimensions [mm]
A = Screw terminal

General information

- Max. 3 switching elements can be clipped on

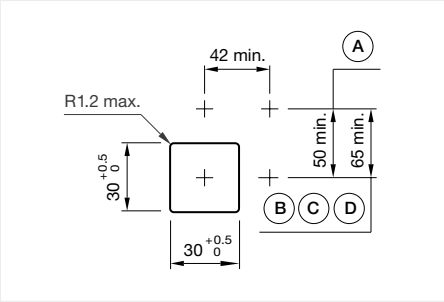

Mounting cut-outs [mm]
A = Screw terminal
B = Push-in terminal (PIT)
C = Plug-in terminal 6.3 mm x 0.8 mm
D = Double plug-in terminal 6.3v x 0.8 mm

Equipment consisting of (schematic overview)

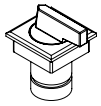

Actuator

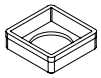

Press frame

Bayonet flange

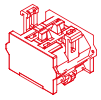

Switching element Page 167

Each Part Number listed below includes all the black components shown in the 3D-drawing.

To obtain a complete unit, please select the red components from the pages shown.

Actuator, Front dimension 35 mm x 35 mm

Switching action	Front bezel colour	Front bezel material	Switching angle	Part No.	Wiring diagram
Maintained - Rest - Maintained	Black	Plastic	42° left / 42° right	704.292.000	95
	Silver	Plastic	42° left / 42° right	704.292.008	95
Momentary - Rest - Momentary	Black	Plastic	42° left / 42° right	704.294.000	94
	Silver	Plastic	42° left / 42° right	704.294.008	94
Maintained - Rest - Momentary	Black	Plastic	42° left / 42° right	704.296.000	93

Wiring diagrams

Wiring diagram 93

Wiring diagram 94

Wiring diagram 95

Selector switch 3 positions, long lever, round, IP65

Equipment consisting of (schematic overview)

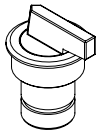
Actuator

Pressure ring

Bayonet flange

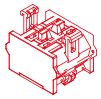
Switching element Page 167

Each Part Number listed below includes all the black components shown in the 3D-drawing.

To obtain a complete unit, please select the red components from the pages shown.

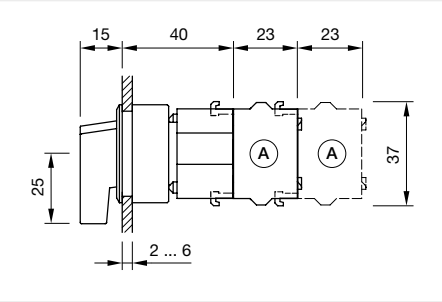

Dimensions [mm]
A = Screw terminal

Product can differ from the current configuration.

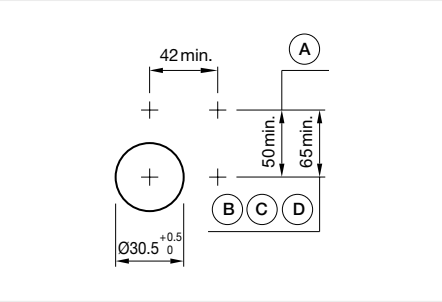

Mounting cut-outs [mm]
A = Screw terminal
B = Push-in terminal (PIT)
C = Plug-in terminal 6.3 mm x 0.8 mm
D = Double plug-in terminal 6.3 mm x 0.8 mm

General information

- Max. 3 switching elements can be clipped on
- The colour of anodised aluminium parts can vary due to technical production reasons

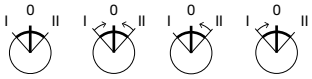

Actuator, Front dimension Ø 35 mm

Switching action	Front bezel colour	Front bezel material	Switching angle	Front bezel surface	Part No.	Wiring diagram
Maintained - Rest - Maintained	Black	Aluminium	42° left / 42° right	anodised	704.093.010	95
	Nature	Aluminium	42° left / 42° right	anodised	704.093.018	95
Momentary - Rest - Momentary	Black	Aluminium	42° left / 42° right	anodised	704.095.010	94
	Nature	Aluminium	42° left / 42° right	anodised	704.095.018	94
Maintained - Rest - Momentary	Black	Aluminium	42° left / 42° right	anodised	704.097.010	93
	Nature	Aluminium	42° left / 42° right	anodised	704.097.018	93
Momentary - Rest - Maintained	Black	Aluminium	42° left / 42° right	anodised	704.099.010	92
	Nature	Aluminium	42° left / 42° right	anodised	704.099.018	92

Wiring diagrams

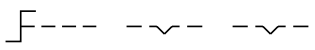
Wiring diagram 92

Wiring diagram 93

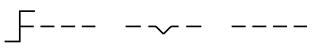
Wiring diagram 94

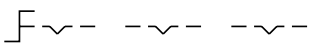
Wiring diagram 95

Selector rotary switch, short lever rounded, round, IP65

Product can differ from the current configuration.

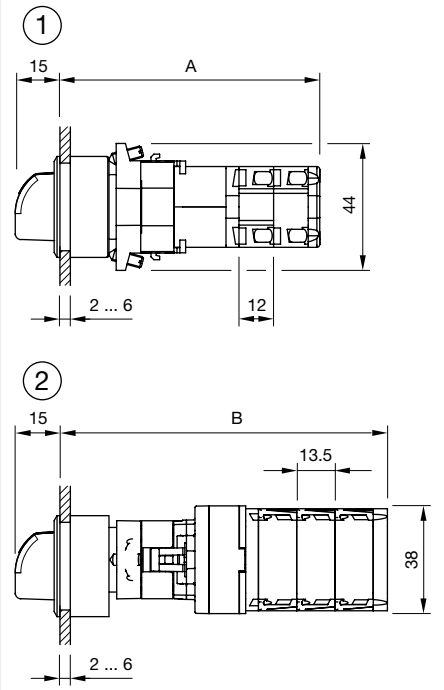

Dimensions [mm]
1 = Kraus & Naimer switching element
A = (Number of stages x 12) + 66.5 mm
2 = Santon switching element
B = (Number of stages x 13.5) + 65.5 mm

Equipment consisting of (schematic overview)

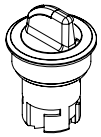

Actuator

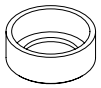

Pressure ring

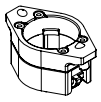

Bayonet flange

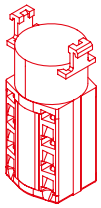

Switching element Page 182

Each Part Number listed below includes all the black components shown in the 3D-drawing.

To obtain a complete unit, please select the red components from the pages shown.

General information

- The colour of anodised aluminium parts can vary due to technical production reasons

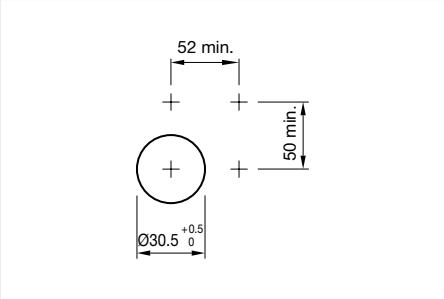

Mounting cut-outs [mm]

Actuator, Front dimension Ø 35 mm

Front bezel colour	Front bezel material	Switching positions	Front bezel surface	Part No.
Black	Aluminium	Rest = 12 o'clock	anodised	704.411.010KNI
Nature	Aluminium	Rest = 12 o'clock	anodised	704.411.018KNI
	Aluminium	Rest = 9 o'clock	anodised	704.411.118KNI

Selector rotary switch, short lever, square, IP65

Equipment consisting of (schematic overview)

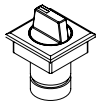

Actuator

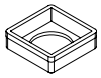

Press frame

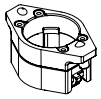

Bayonet flange

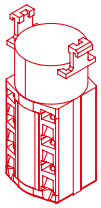

Switching element Page 182

Each Part Number listed below includes all the black components shown in the 3D-drawing.

To obtain a complete unit, please select the red components from the pages shown.

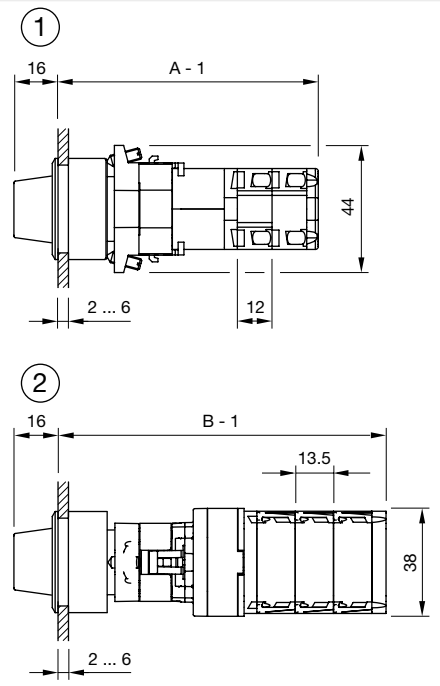

Dimensions [mm]
1 = Kraus & Naimer switching element
A = (Number of stages x 12) + 66.5 mm
2 = Santon switching element
B = (Number of stages x 13.5) + 65.5 mm

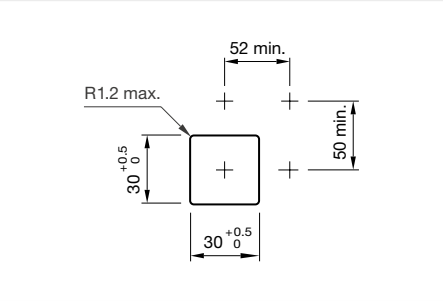

Mounting cut-outs [mm]

Product can differ from the current configuration.

Actuator, Front dimension 35 mm x 35 mm

Front bezel colour	Front bezel material	Switching positions	Part No.
Black	Plastic	Rest = 9 o'clock	704.510.100KN

Selector rotary switch short lever, round, IP65

Product can differ from the current configuration.

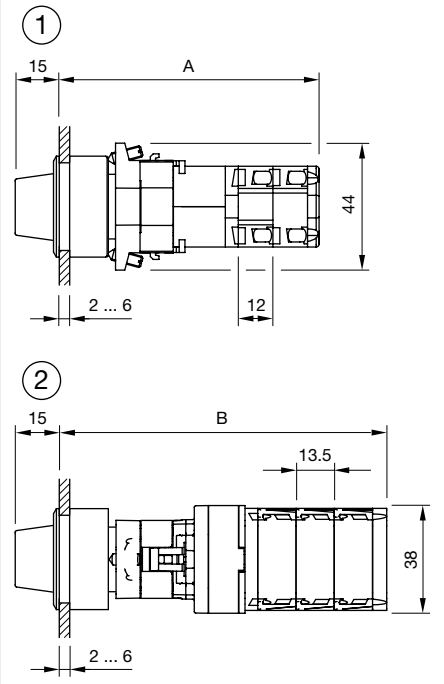

Dimensions [mm]
1 = Kraus & Naimer switching element
A = (Number of stages x 12) + 66.5 mm
2 = Santon switching element
B = (Number of stages x 13.5) + 65.5 mm

Equipment consisting of (schematic overview)

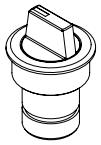

Actuator

Pressure ring

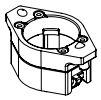

Bayonet flange

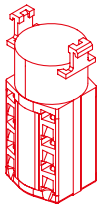

Switching element Page 182

Each Part Number listed below includes all the black components shown in the 3D-drawing.

To obtain a complete unit, please select the red components from the pages shown.

General information

- The colour of anodised aluminium parts can vary due to technical production reasons

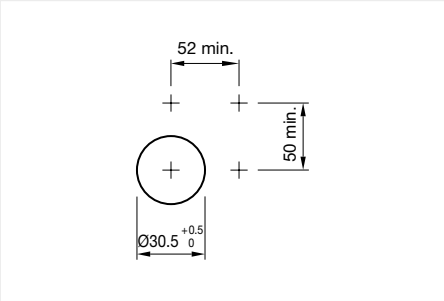

Mounting cut-outs [mm]

Actuator, Front dimension Ø 35 mm

Front bezel colour	Front bezel material	Switching positions	Front bezel surface	Part No.
Black	Aluminium	Rest = 12 o'clock	anodised	704.411.010KN
Nature	Aluminium	Rest = 12 o'clock	anodised	704.411.018KN
Black	Aluminium	Rest = 9 o'clock	anodised	704.411.110KN
Nature	Aluminium	Rest = 9 o'clock	anodised	704.411.118KN

Selector rotary switch, long lever rounded, round, IP65

Equipment consisting of (schematic overview)

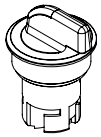

Actuator

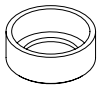

Pressure ring

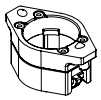

Bayonet flange

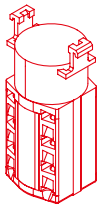

Switching element Page 182

Each Part Number listed below includes all the black components shown in the 3D-drawing.

To obtain a complete unit, please select the red components from the pages shown.

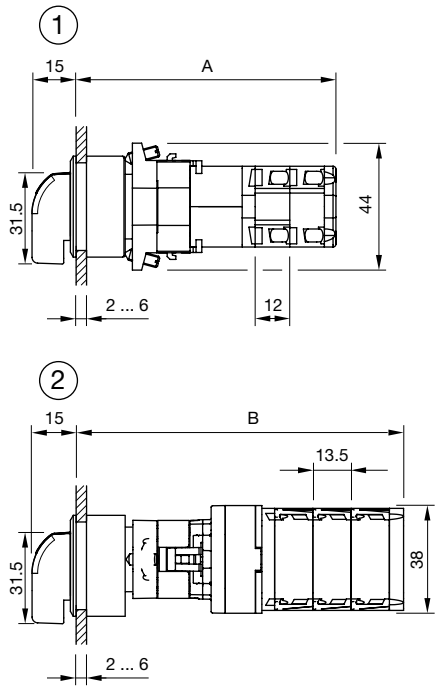

Dimensions [mm]
1 = Kraus & Naimer switching element
A = (Number of stages x 12) + 66.5 mm
2 = Santon switching element
B = (Number of stages x 13.5) + 65.5 mm

Product can differ from the current configuration.

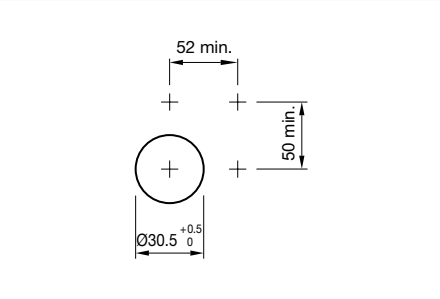

Mounting cut-outs [mm]

General information

- The colour of anodised aluminium parts can vary due to technical production reasons

Actuator, Front dimension Ø 35 mm

Front bezel colour	Front bezel material	Switching positions	Front bezel surface	Part No.
Nature	Aluminium	Rest = 12 o'clock	anodised	704.101.018KNI
Black	Aluminium	Rest = 9 o'clock	anodised	704.101.110KNI
Nature	Aluminium	Rest = 9 o'clock	anodised	704.101.118KNI

Selector rotary switch long lever, square, IP65

Product can differ from the current configuration.

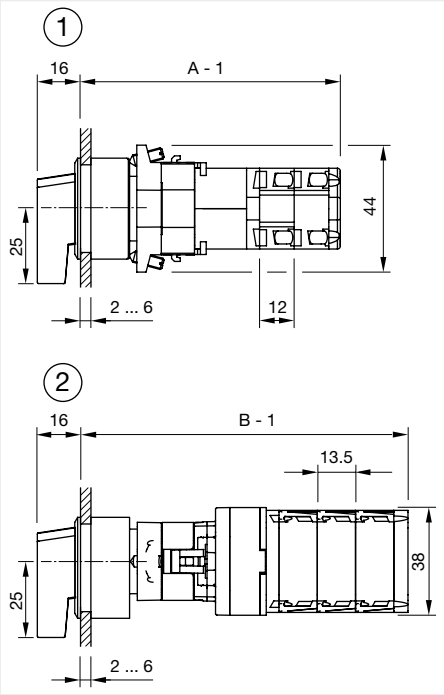

Dimensions [mm]
1 = Kraus & Naimer switching element
A = (Number of stages x 12) + 66.5 mm
2 = Santon switching element
B = (Number of stages x 13.5) + 65.5 mm

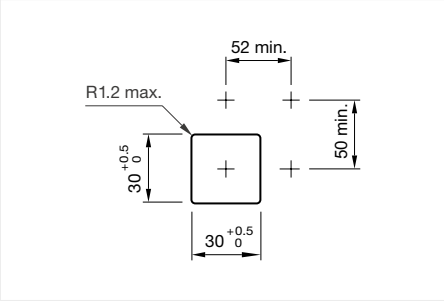

Mounting cut-outs [mm]

Equipment consisting of (schematic overview)

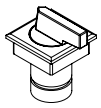

Actuator

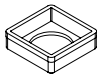

Press frame

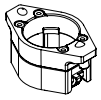

Bayonet flange

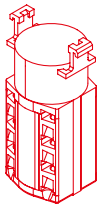

Switching element Page 182

Each Part Number listed below includes all the black components shown in the 3D-drawing.

To obtain a complete unit, please select the red components from the pages shown.

Actuator, Front dimension 35 mm x 35 mm

Front bezel colour	Front bezel material	Switching positions	Part No.
Black	Plastic	Rest = 9 o'clock	704.300.100KN
Silver	Plastic	Rest = 9 o'clock	704.300.108KN

Selector rotary switch long lever, round, IP65

Equipment consisting of (schematic overview)

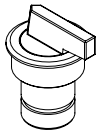

Actuator

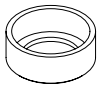

Pressure ring

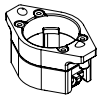

Bayonet flange

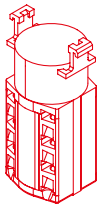

Switching element Page 182

Each Part Number listed below includes all the black components shown in the 3D-drawing.

To obtain a complete unit, please select the red components from the pages shown.

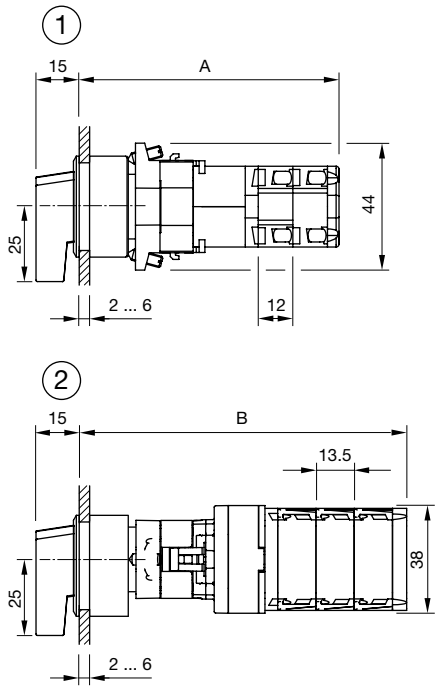

Dimensions [mm]
1 = Kraus & Naimer switching element
A = (Number of stages x 12) + 66.5 mm
2 = Santon switching element
B = (Number of stages x 13.5) + 65.5 mm

Product can differ from the current configuration.

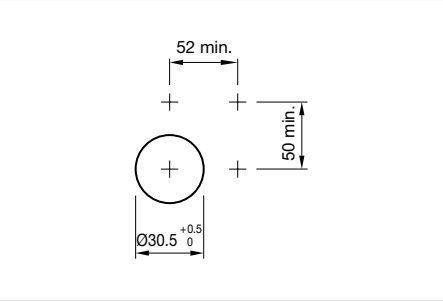

Mounting cut-outs [mm]

General information

- The colour of anodised aluminium parts can vary due to technical production reasons

Actuator, Front dimension Ø 35 mm

Front bezel colour	Front bezel material	Switching positions	Front bezel surface	Part No.
Nature	Aluminium	Rest = 12 o'clock	anodised	704.101.018KN
Black	Aluminium	Rest = 9 o'clock	anodised	704.101.110KN
Nature	Aluminium	Rest = 9 o'clock	anodised	704.101.118KN

04 Flush design

Keylock switch 2 positions, square, IP65

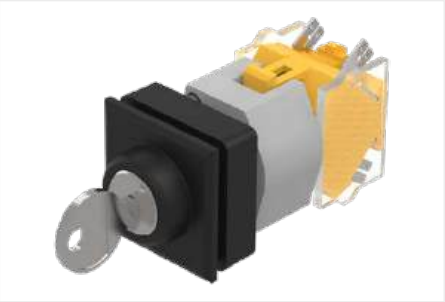

Product can differ from the current configuration.

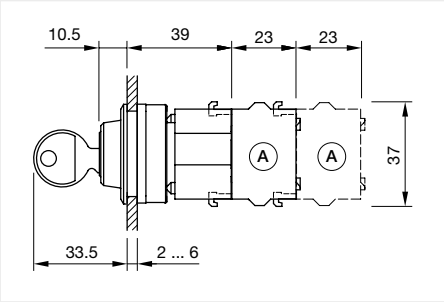

Dimensions [mm]
A = Screw terminal

General information

- Max. 3 switching elements can be clipped on
- The standard lock Ronis 251
- Further lock numbers on request

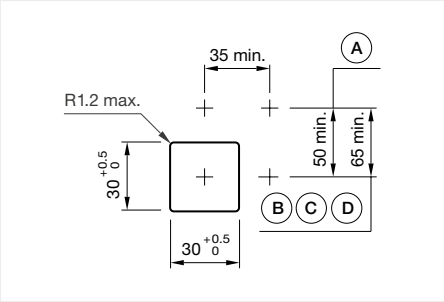

Mounting cut-outs [mm]
A = Screw terminal
B = Push-in terminal (PIT)
C = Plug-in terminal 6.3 mm x 0.8 mm
D = Double plug-in terminal 6.3 mm x 0.8 mm

Equipment consisting of (schematic overview)

Actuator

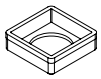

Press frame

Bayonet flange

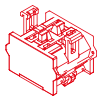

Switching element Page 167

Each Part Number listed below includes all the black components shown in the 3D-drawing.

To obtain a complete unit, please select the red components from the pages shown.

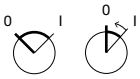

Actuator, Front dimension 35 mm x 35 mm

Switching action	Front bezel colour	Front bezel material	Switching angle	Part No.	Wiring diagram
Rest - Maintained (a)	Black	Plastic	90° right / -45° … +45°	704.340.000	79
	Silver	Plastic	90° right / -45° … +45°	704.340.008	79
Rest (a) - Maintained	Black	Plastic	90° right / -45° … +45°	704.341.000	79
	Silver	Plastic	90° right / -45° … +45°	704.341.008	79
Rest (a) - Maintained (a)	Silver	Plastic	90° right / -45° … +45°	704.342.008	79
Rest (a) - Momentary	Black	Plastic	42° right	704.343.000	78

a = Key remove

Wiring diagrams

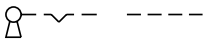

Wiring diagram 78

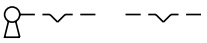

Wiring diagram 79

Keylock switch 2 positions, round, IP65

Equipment consisting of (schematic overview)

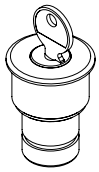

Actuator

Anti-twist device

Pressure ring

Bayonet flange

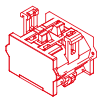

Switching element Page 167

Each Part Number listed below includes all the black components shown in the 3D-drawing.

To obtain a complete unit, please select the red components from the pages shown.

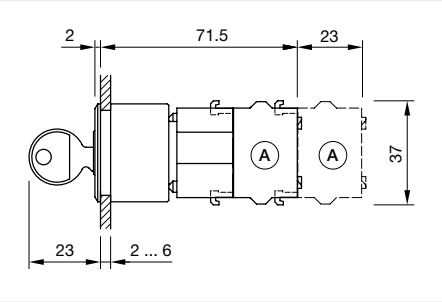

Dimensions [mm]
A = Screw terminal

Product can differ from the current configuration.

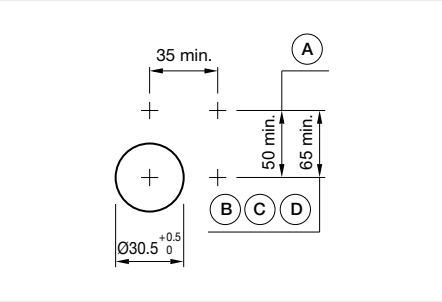

Mounting cut-outs [mm]
A = Screw terminal
B = Push-in terminal (PIT)
C = Plug-in terminal 6.3 mm x 0.8 mm
D = Double plug-in terminal 6.3 mm x 0.8 mm

General information

- Max. 3 switching elements can be clipped on
- The standard lock Ronis 251
- Further lock numbers on request
- The colour of anodised aluminium parts can vary due to technical production reasons

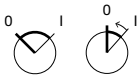

Actuator, Front dimension Ø 35 mm

Switching action	Front bezel colour	Front bezel material	Switching angle	Part No.	Wiring diagram
Rest - Maintained (a)	Nature	Aluminium	90° right / -45° … +45°	704.120.018	79
Rest (a) - Maintained	Nature	Aluminium	90° right / -45° … +45°	704.121.018	79
Rest (a) - Maintained (a)	Nature	Aluminium	90° right / -45° … +45°	704.122.018	79
Rest (a) - Momentary	Nature	Aluminium	42° right	704.123.018	78

a = Key remove

Wiring diagrams

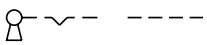

Wiring diagram 78

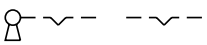

Wiring diagram 79

Keylock switch 3 positions, square, IP65

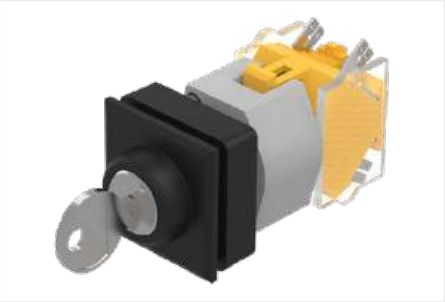

Product can differ from the current configuration.

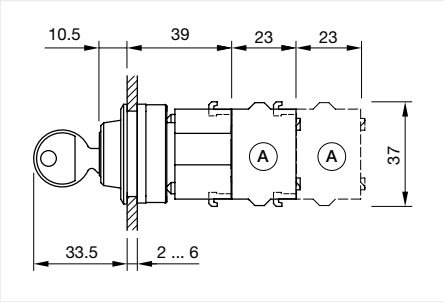

Dimensions [mm]
A = Screw terminal

General information

- Max. 3 switching elements can be clipped on
- The standard lock Ronis 251
- Further lock numbers on request

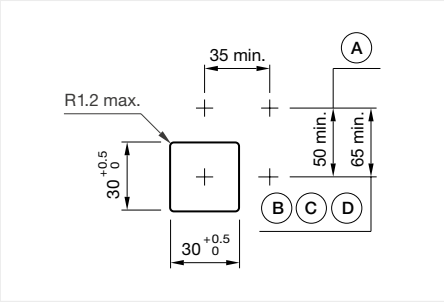

Mounting cut-outs [mm]
A = Screw terminal
B = Push-in terminal (PIT)
C = Plug-in terminal 6.3 mm x 0.8 mm
D = Double plug-in terminal 6.3 mm x 0.8 mm

Equipment consisting of (schematic overview)

Actuator

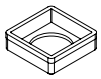

Press frame

Bayonet flange

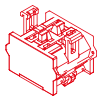

Switching element Page 167

Each Part Number listed below includes all the black components shown in the 3D-drawing.

To obtain a complete unit, please select the red components from the pages shown.

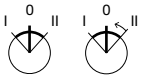

Actuator, Front dimension 35 mm x 35 mm

Switching action	Front bezel colour	Front bezel material	Switching angle	Part No.	Wiring diagram
Maintained (a) - Rest - Maintained (a)	Black	Plastic	42° left / 42° right	704.336.000	83
Maintained (a) - Rest (a) - Momentary	Black	Plastic	42° left / 42° right	704.344.000	81

a = Key remove

Wiring diagrams

Wiring diagram 81

Wiring diagram 83

Keylock switch 3 positions, round, IP65

Equipment consisting of (schematic overview)

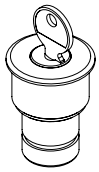
Actuator

Anti-twist device

Pressure ring

Bayonet flange

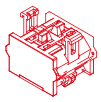
Switching element Page 167

Each Part Number listed below includes all the black components shown in the 3D-drawing.

To obtain a complete unit, please select the red components from the pages shown.

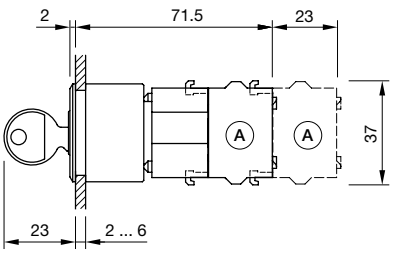

Dimensions [mm]
A = Screw terminal

Product can differ from the current configuration.

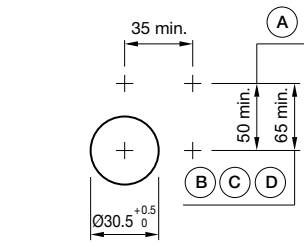

Mounting cut-outs [mm]
A = Screw terminal
B = Push-in terminal (PIT)
C = Plug-in terminal 6.3 mm x 0.8 mm
D = Double plug-in terminal 6.3 mm x 0.8 mm

General information

- Max. 3 switching elements can be clipped on
- The standard lock Ronis 251
- Further lock numbers on request
- The colour of anodised aluminium parts can vary due to technical production reasons

Actuator, Front dimension Ø 35 mm

Switching action	Front bezel colour	Front bezel material	Switching angle	Part No.	Wiring diagram
Maintained (a) - Rest (a) - Maintained (a)	Nature	Aluminium	90° left / 90° right	704.113.018	83
Maintained - Rest (a) - Maintained	Nature	Aluminium	42° left / 42° right	704.114.018	83
Momentary - Rest (a) - Momentary	Nature	Aluminium	42° left / 42° right	704.115.018	82
Maintained (a) - Rest - Maintained (a)	Nature	Aluminium	42° left / 42° right	704.116.018	83
Maintained (a) - Rest - Momentary	Nature	Aluminium	42° left / 42° right	704.117.018	81
Momentary - Rest (a) - Maintained	Nature	Aluminium	42° left / 42° right	704.118.018	80
Maintained (a) - Rest (a) - Momentary	Nature	Aluminium	42° left / 42° right	704.124.018	81

a = Key remove

Wiring diagrams

Wiring diagram 80

Wiring diagram 81

Wiring diagram 82

Wiring diagram 83

04 Flush design

Keylock rotary switch, IP65

Product can differ from the current configuration.

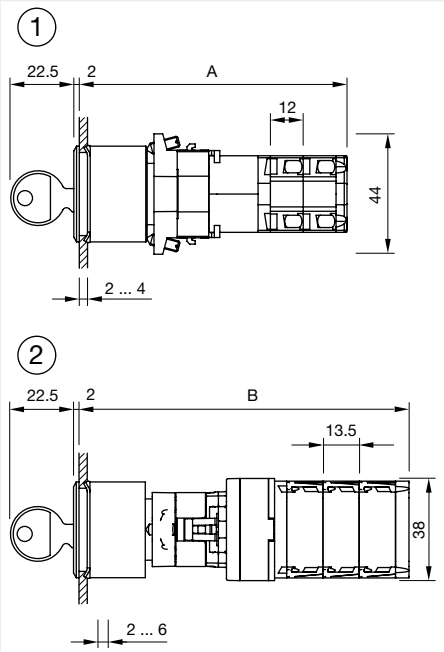

Dimensions [mm]
1 = Kraus & Naimer switching element
A = (Number of stages x 12) + 66.5 mm
2 = Santon switching element
B = (Number of stages x 13.5) + 65.5 mm

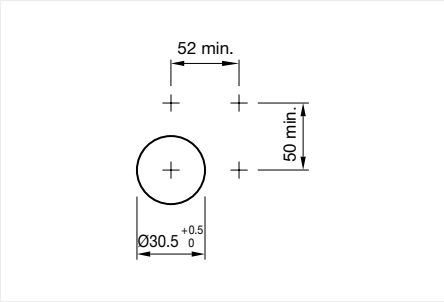

Mounting cut-outs [mm]

Equipment consisting of (schematic overview)

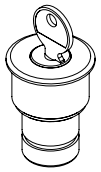

Actuator

Anti-twist device

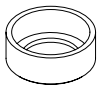

Pressure ring

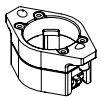

Bayonet flange

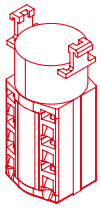

Switching element Page 182

Each Part Number listed below includes all the black components shown in the 3D-drawing.

To obtain a complete unit, please select the red components from the pages shown.

General information

- The standard lock Ronis 251
- The colour of anodised aluminium parts can vary due to technical production reasons

Actuator, Front dimension Ø 35 mm

Switching action	Front bezel colour	Front bezel material	Switching positions	Part No.
Maintained - Rest (a)	Nature	Aluminium	Rest = 12 o'clock	704.123.018KN
	Nature	Aluminium	Rest = 9 o'clock	704.123.118KN

a = Key remove

Key-insert switch 2 positions , IP67

Equipment consisting of (schematic overview)

Actuator

Fixing nut

Bayonet flange

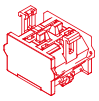
Switching element Page 167

Each Part Number listed below includes all the black components shown in the 3D-drawing.

To obtain a complete unit, please select the red components from the pages shown.

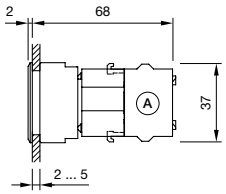

Dimensions [mm]
A = Screw terminal

Product can differ from the current configuration.

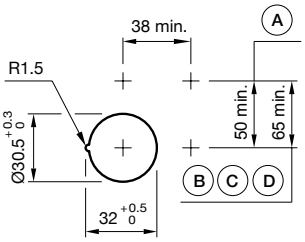

Mounting cut-outs [mm]
A = Screw terminal
B = Push-in terminal (PIT)
C = Plug-in terminal 6.3 mm x 0.8 mm
D = Double plug-in terminal 6.3 mm x 0.8 mm

General information

- Max. 3 switching elements can be clipped on
- In the Part-No. „x" stands for not defined actuator

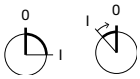

Actuator, Front dimension Ø 38 mm

Switching action	Front bezel colour	Front bezel material	Switching angle	Part No.	Wiring diagram
Rest - Maintained	Nature	Stainless steel	90° right	704.101.0x28	97
Rest - Momentary	Nature	Stainless steel	45° left	704.103.0x28	98

Wiring diagrams

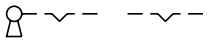
Wiring diagram 97

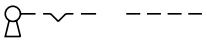
Wiring diagram 98

Key-insert switch 3 positions, IP67

Product can differ from the current configuration.

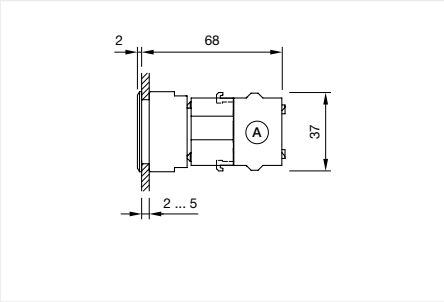

Dimensions [mm]
A = Screw terminal

General information

- Max. 3 switching elements can be clipped on
- In the Part-No. „x" stands for not defined actuator

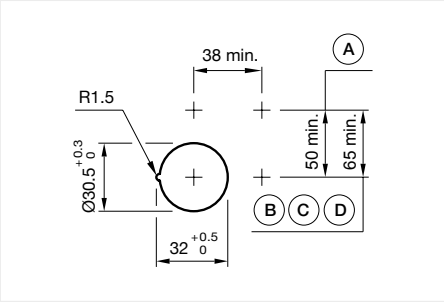

Mounting cut-outs [mm]
A = Screw terminal
B = Push-in terminal (PIT)
C = Plug-in terminal 6.3 mm x 0.8 mm
D = Double plug-in terminal 6.3 mm x 0.8 mm

Equipment consisting of (schematic overview)

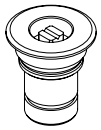

Actuator

Fixing nut

Bayonet flange

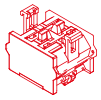

Switching element Page 167

Each Part Number listed below includes all the black components shown in the 3D-drawing.

To obtain a complete unit, please select the red components from the pages shown.

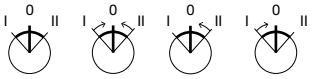

Actuator, Front dimension Ø 38 mm

Switching action	Front bezel colour	Front bezel material	Switching angle	Part No.	Wiring diagram
Maintained - Rest - Maintained	Nature	Stainless steel	45° left / 45° right	704.093.0x28	99
Momentary - Rest - Momentary	Nature	Stainless steel	45° left / 45° right	704.095.0x28	100
Maintained - Rest - Momentary	Nature	Stainless steel	45° left / 45° right	704.097.0x28	101
Momentary - Rest - Maintained	Nature	Stainless steel	45° left / 45° right	704.099.0x28	102

Wiring diagrams

Wiring diagram 99

Wiring diagram 100

Wiring diagram 101

Wiring diagram 102

Key-insert switch 3 positions, conductor switch, IP67

Equipment consisting of (schematic overview)

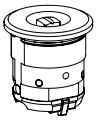

Actuator

Fixing nut

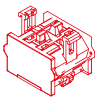

Switching element Page 167

Each Part Number listed below includes all the black components shown in the 3D-drawing.

To obtain a complete unit, please select the red components from the pages shown.

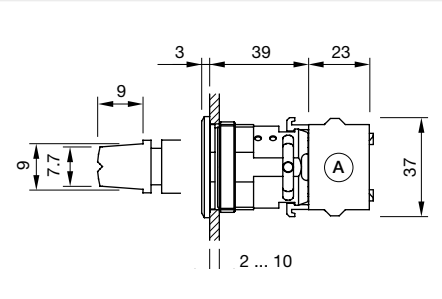

Dimensions [mm]
A = Screw terminal

Product can differ from the current configuration.

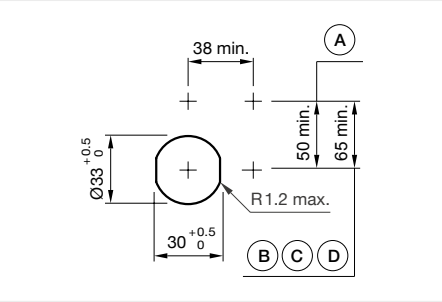

Mounting cut-outs [mm]
A = Screw terminal
B = Push-in terminal (PIT)
C = Plug-in terminal 6.3 mm x 0.8 mm
D = Double plug-in terminal 6.3 mm x 0.8 mm

General information

- Max. 2 switching elements can be clipped on

Actuator, Front dimension Ø 38 mm

Switching action	Front bezel colour	Front bezel material	Switching angle	Part No.	Wiring diagram
Momentary - Rest - Momentary	Nature	Stainless steel	42° left / 42° right	704.095.0T28N	100

Wiring diagrams

Wiring diagram 100

Lever switch, IP54

Product can differ from the current configuration.

Dimensions [mm]

Equipment consisting of (schematic overview)

Each Part Number listed below includes all the black components shown in the 3D-drawing.

General information

- For all units are the levers 02 (black), 03, 04, 05, 06 (yellow) 13, 14, 15 and 16 available (levers 6 + 16 according UIC 612). Special levers on request
- Front bezel can also be delivered in black version
- Functions and properties, including lever style and switching positions of the lever switch are being produced according to customer specifications. Please contact your local EAO Sales Office
- Micro-switch contacts: The micro-switch is available with a silver contact or a gold plated silver contact. Contact without positive opening operation is used in the lever switches S41, S42 and S43
- Each lever switch includes a maximum of five micro-switches. Contact with positive opening operation is used in the lever switches S44 and S45. Each lever switch includes a maximum of four micro-switches

Actuator, Front dimension Ø 40 mm

Product attributes	Front bezel colour	Front bezel material	Front bezel surface	Switching system	Contacts	Part No.
S41: Cage clamp 1.0 mm … 1.5 mm², 1 contact element	Nature	Aluminium	anodised	Snap-action switching element	1 NC / 1 NO	704.151.XXX
S42: JST connector max. 0.2 mm² (counter plug is supplied), 1 contact element	Nature	Aluminium	anodised	Snap-action switching element	1 NC / 1 NO	704.152.XXX
S43: Plug-in terminal 6.3 mm x 0.8 mm, 1 contact element	Nature	Aluminium	anodised	Snap-action switching element	1 NC / 1 NO	704.153.XXX
S44: Cage clamp 1.0 mm … 1.5 mm², 1 contact element positive opend	Nature	Aluminium	anodised	Snap-action switching element	1 NC / 1 NO	704.154.XXX
S45: Screw terminal or plug-in terminal 6.3 mm x 0.8 mm, 1 contact element positive opend	Nature	Aluminium	anodised	Snap-action switching element	1 NC / 1 NO	704.155.XXX

Contacts: NC = Normally closed, NO = Normally open

Indicator square, IP65

Equipment consisting of (schematic overview)

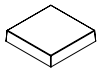
Lens

Lens holder

Actuator

Press frame

Bayonet flange

LED Page 158

Lamp block

Each Part Number listed below includes all the black components shown in the 3D-drawing.

To obtain a complete unit, please select the red components from the pages shown.

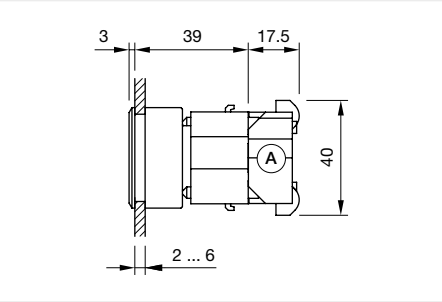

Dimensions [mm]
A = Screw terminal

Product can differ from the current configuration.

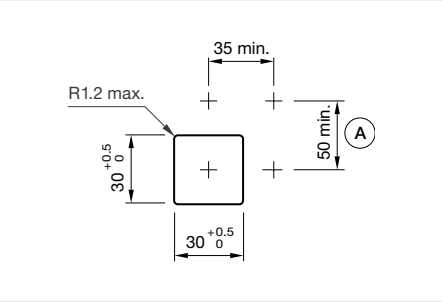

Mounting cut-outs [mm]
A = Screw terminal

Actuator, Front dimension 35 mm x 35 mm

Housing colour	Housing material	Lens colour	Front bezel colour	Front bezel material	Marking plate colour	Marking plate optics	Part No.	Wiring diagram
Black	Plastic	Red	Silver	Plastic	White	translucent	704.202.208	4
	Plastic	Yellow	Silver	Plastic	White	translucent	704.202.408	4
	Plastic	Green	Silver	Plastic	White	translucent	704.202.508	4
	Plastic	Blue	Silver	Plastic	White	translucent	704.202.608	4
	Plastic	Colourless	Silver	Plastic	White	translucent	704.202.708	4
	Plastic	Red	Black	Plastic	White	translucent	704.206.200	4
	Plastic	Yellow	Black	Plastic	White	translucent	704.206.400	4
	Plastic	Green	Black	Plastic	White	translucent	704.206.500	4
	Plastic	Blue	Black	Plastic	White	translucent	704.206.600	4
	Plastic	Colourless	Black	Plastic	White	translucent	704.206.700	4

Wiring diagrams

Wiring diagram 4

Indicator round, IP65

Equipment consisting of (schematic overview)

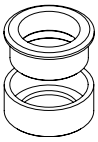
Front bezel set

Lens

Marking Plate

Actuator

Bayonet flange

LED Page 158

Lamp block

Each Part Number listed below includes all the black components shown in the 3D-drawing.

To obtain a complete unit, please select the red components from the pages shown.

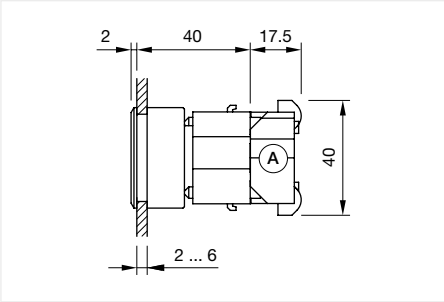

Dimensions [mm]
A = Screw terminal

Product can differ from the current configuration.

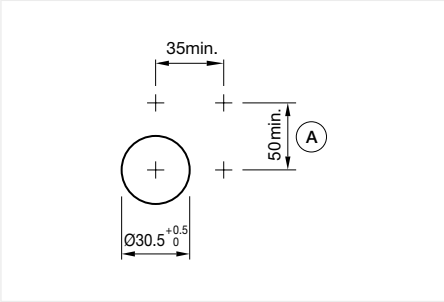

Mounting cut-outs [mm]
A = Screw terminal

Actuator, Front dimension Ø 35 mm

Housing colour	Housing material	Lens colour	Front bezel colour	Front bezel material	Front bezel surface	Part No.	Wiring diagram
Grey	Plastic	Red	Nature	Aluminium	anodised	704.006.218	4
	Plastic	Yellow	Nature	Aluminium	anodised	704.006.418	4
	Plastic	Green	Nature	Aluminium	anodised	704.006.518	4
	Plastic	Blue	Nature	Aluminium	anodised	704.006.618	4
	Plastic	Colourless	Nature	Aluminium	anodised	704.006.718	4

Wiring diagrams

Wiring diagram 4

04 Flush design

Indicator square, IP65

Product can differ from the current configuration.

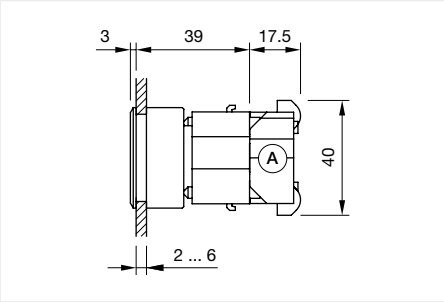

Dimensions [mm]
A = Screw terminal

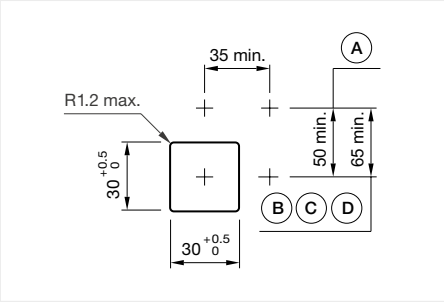

Mounting cut-outs [mm]
A = Screw terminal
B = Push-in terminal (PIT)
C = Plug-in terminal 6.3 mm x 0.8 mm
D = Double plug-in terminal 6.3 mm x 0.8 mm

Equipment consisting of (schematic overview)

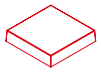
Lens Page 153

Lens holder Page 155

Actuator

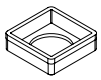
Press frame

Bayonet flange Page 157

LED Page 158

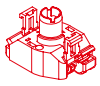
Lamp block Page 164

Each Part Number listed below includes all the black components shown in the 3D-drawing.

To obtain a complete unit, please select the red components from the pages shown.

Actuator, Front dimension 35 mm x 35 mm

Housing colour	Housing material	Front bezel colour	Front bezel material	Part No.	Wiring diagram
Black	Plastic	Black	Plastic	704.743.0	4
	Plastic	Silver	Plastic	704.743.8	4

Wiring diagrams

Wiring diagram 4

Indicator round, IP65

Equipment consisting of (schematic overview)

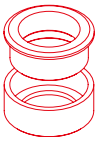

Front bezel set — Page 156

Lens — Page 153

Marking Plate — Page 155

Actuator

Bayonet flange — Page 157

LED — Page 158

Lamp block — Page 164

Each Part Number listed below includes all the black components shown in the 3D-drawing.

To obtain a complete unit, please select the red components from the pages shown.

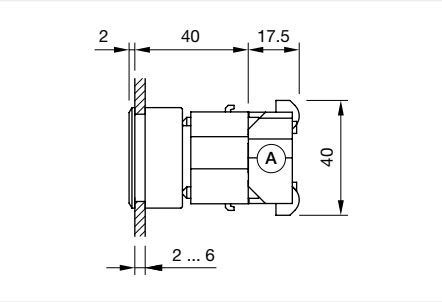

Dimensions [mm]
A = Screw terminal

Product can differ from the current configuration.

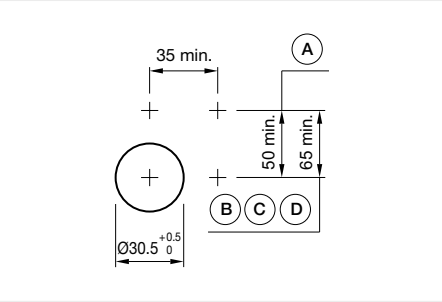

Mounting cut-outs [mm]
A = Screw terminal
B = Push-in terminal (PIT)
C = Plug-in terminal 6.3 mm x 0.8 mm
D = Double plug-in terminal 6.3 mm x 0.8 mm

Actuator, Front dimension Ø 35 mm

Housing colour	Housing material	Part No.	Wiring diagram
Grey	Plastic	704.633.1	4

Wiring diagrams

Wiring diagram 4

Flasher without LED square, IP65

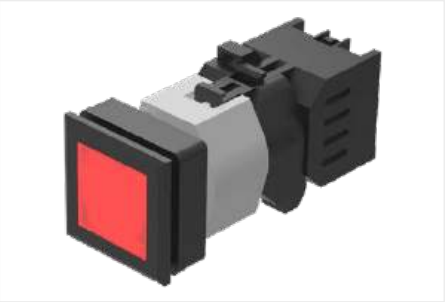

Product can differ from the current configuration.

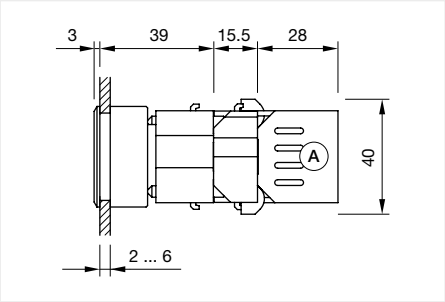

Dimensions [mm]
A = Screw terminal

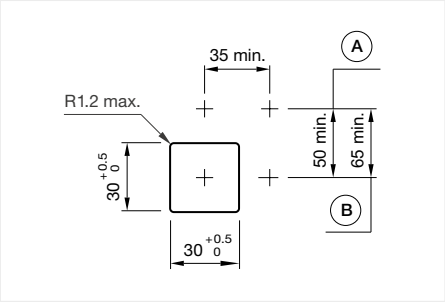

Mounting cut-outs [mm]
A = Screw terminal
B = Push-in terminal (PIT)

Equipment consisting of (schematic overview)

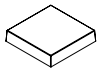
Lens

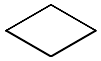
Marking foil

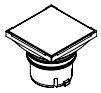
Lens holder

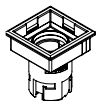
Actuator

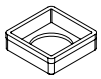
Press frame

Bayonet flange

LED Page 158

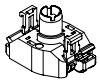
Lamp block

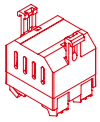
Flasher element Page 185

Each Part Number listed below includes all the black components shown in the 3D-drawing.

To obtain a complete unit, please select the red components from the pages shown.

Actuator, Front dimension 35 mm x 35 mm

Housing colour	Housing material	Lens colour	Front bezel colour	Front bezel material	Marking plate colour	Marking plate optics	Part No.	Wiring diagram
Black	Plastic	Red	Silver	Plastic	White	translucent	704.202.208	4
	Plastic	Yellow	Silver	Plastic	White	translucent	704.202.408	4
	Plastic	Green	Silver	Plastic	White	translucent	704.202.508	4
	Plastic	Blue	Silver	Plastic	White	translucent	704.202.608	4
	Plastic	Colourless	Silver	Plastic	White	translucent	704.202.708	4
	Plastic	Red	Black	Plastic	White	translucent	704.206.200	4
	Plastic	Yellow	Black	Plastic	White	translucent	704.206.400	4
	Plastic	Green	Black	Plastic	White	translucent	704.206.500	4
	Plastic	Blue	Black	Plastic	White	translucent	704.206.600	4
	Plastic	Colourless	Black	Plastic	White	translucent	704.206.700	4

Wiring diagrams

Wiring diagram 4

04 Flush design

Flasher without LED round, IP65

Product can differ from the current configuration.

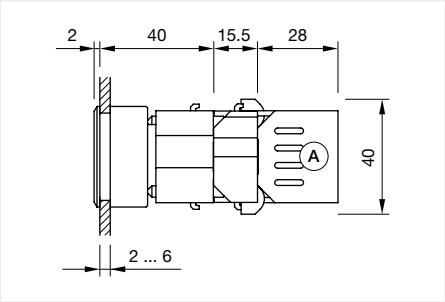

Dimensions [mm]
A = Screw terminal

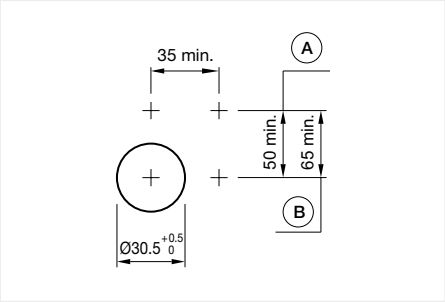

Mounting cut-outs [mm]
A = Screw terminal
B = Push-in terminal (PIT)

Equipment consisting of (schematic overview)

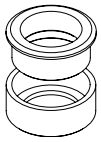

Front bezel set

Lens

Marking Plate

Actuator

Bayonet flange

LED Page 158

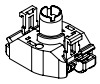

Lamp block

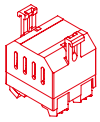

Flasher element Page 185

Each Part Number listed below includes all the black components shown in the 3D-drawing.

To obtain a complete unit, please select the red components from the pages shown.

Actuator, Front dimension Ø 35 mm

Housing colour	Housing material	Lens colour	Front bezel colour	Front bezel material	Front bezel surface	Part No.	Wiring diagram
Grey	Plastic	Red	Nature	Aluminium	anodised	704.006.218	4
	Plastic	Yellow	Nature	Aluminium	anodised	704.006.418	4
	Plastic	Green	Nature	Aluminium	anodised	704.006.518	4
	Plastic	Blue	Nature	Aluminium	anodised	704.006.618	4
	Plastic	Colourless	Nature	Aluminium	anodised	704.006.718	4

Wiring diagrams

Wiring diagram 4

Flasher square, IP65

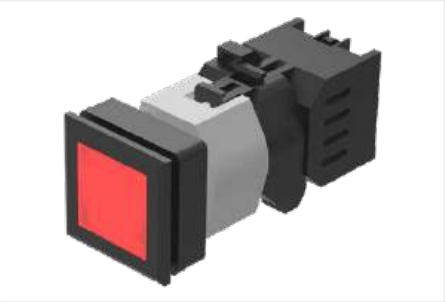

Product can differ from the current configuration.

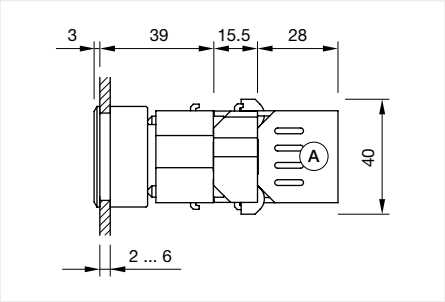

Dimensions [mm]
A = Screw terminal

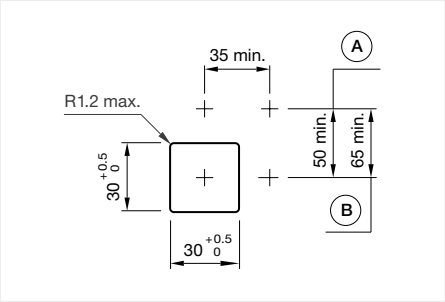

Mounting cut-outs [mm]
A = Screw terminal
B = Push-in terminal (PIT)

Equipment consisting of (schematic overview)

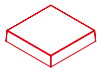
Lens — Page 153

Lens holder — Page 155

Actuator

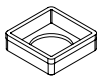
Press frame

Bayonet flange — Page 157

LED — Page 158

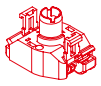
Lamp block — Page 164

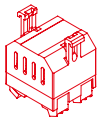
Flasher element — Page 185

Each Part Number listed below includes all the black components shown in the 3D-drawing.

To obtain a complete unit, please select the red components from the pages shown.

Actuator, Front dimension 35 mm x 35 mm

Housing colour	Housing material	Front bezel colour	Front bezel material	Part No.	Wiring diagram
Black	Plastic	Black	Plastic	704.743.0	4
	Plastic	Silver	Plastic	704.743.8	4

Wiring diagrams

Wiring diagram 4

Flasher round, IP65

Equipment consisting of (schematic overview)

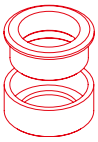

Front bezel set — Page 156

Lens — Page 153

Marking Plate — Page 155

Actuator

Bayonet flange — Page 157

LED — Page 158

Lamp block — Page 164

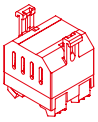

Flasher element — Page 185

Each Part Number listed below includes all the black components shown in the 3D-drawing.

To obtain a complete unit, please select the red components from the pages shown.

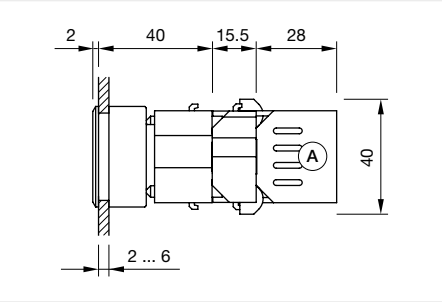

Dimensions [mm]
A = Screw terminal

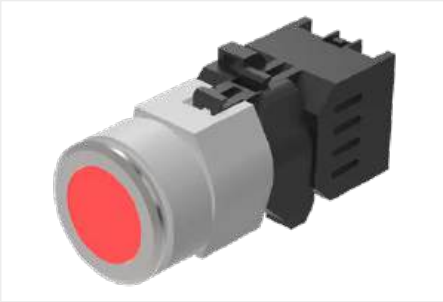

Product can differ from the current configuration.

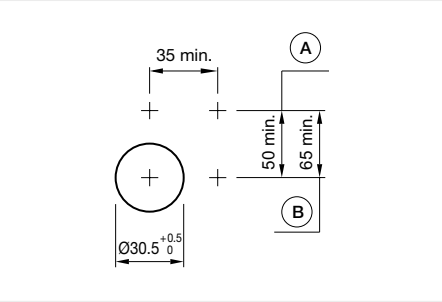

Mounting cut-outs [mm]
A = Screw terminal
B = Push-in terminal (PIT)

Actuator, Front dimension Ø 35 mm

Housing colour	Housing material	Part No.	Wiring diagram
Grey	Plastic	704.633.1	4

Wiring diagrams

Wiring diagram 4

04 Flush design

Buzzer, IP65

Product can differ from the current configuration.

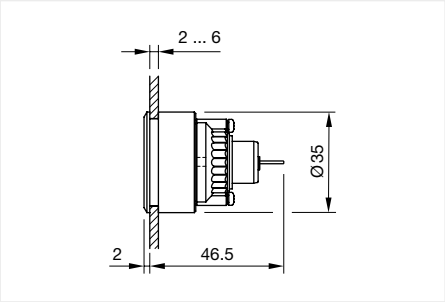

Dimensions [mm]

Equipment consisting of (schematic overview)

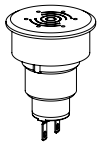

Actuator

Pressure ring

Fixing nut

Each Part Number listed below includes all the black components shown in the 3D-drawing.

General information

- Further information see Technical data

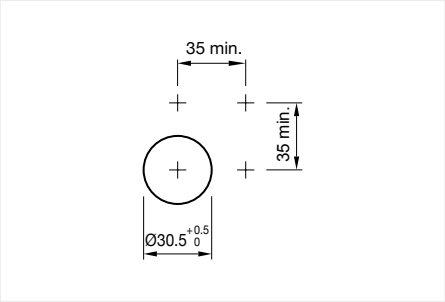

Mounting cut-outs [mm]

Actuator, Front dimension Ø 35 mm

Terminal	Soundpressure	Tone frequency	Operating voltage	Front cap colour	Front cap material	Front cap surface	Part No.	Wiring diagram
Plug-in terminal, 2.8 x 0.5 mm	95 db (A) ±8 dB at a distance of 0.1m	Approx. 3.2 kHz continuous tone only	24 V DC ±10 %	Black	Aluminium	anodised	14-810.910	71
	95 db (A) ±8 dB at a distance of 0.1m	Approx. 3.2 kHz continuous tone only	24 V DC ±10 %	Nature	Aluminium	anodised	14-810.918	71

Wiring diagrams

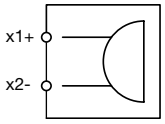

Wiring diagram 71

Modern. Tactile and long-lasting.

Series 04 illuminated selector switches.

Intuitive and reliable operation for enhanced safety in public transportation.

- Bright, single or bi-colour LED illumination
- Modern, ergonomic design
- Rounded edges (in accordance with DIN 5566-1)
- Excellent tactile feedback
- Long service life and robust construction
- Wide range of possible combinations and options

www.eao.com

Your Expert Partner for **Human Machine Interfaces**

04 Flush design

Stop switch, IP65

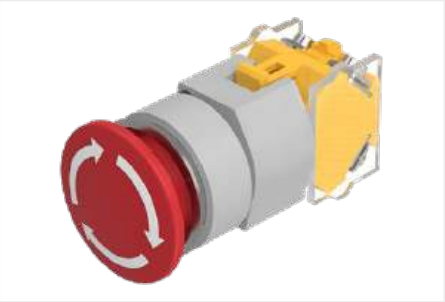

Product can differ from the current configuration.

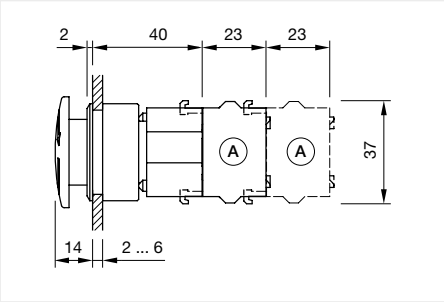

Dimensions [mm]
A = Screw terminal

General information

- Max. 3 switching elements can be clipped on
- Twist to unlock clockwise

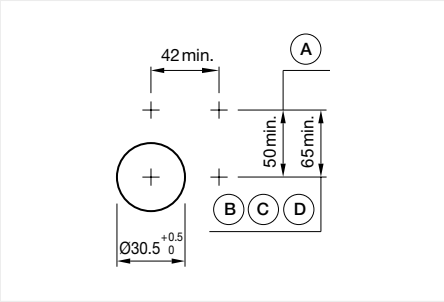

Mounting cut-outs [mm]
A = Screw terminal
B = Push-in terminal (PIT)
C = Plug-in terminal 6.3 mm x 0.8 mm
D = Double plug-in terminal 6.3 mm x 0.8 mm

Equipment consisting of (schematic overview)

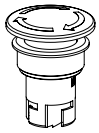

Actuator

Anti-twist device

Pressure ring

Bayonet flange

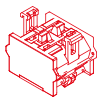

Switching element Page 167

Each Part Number listed below includes all the black components shown in the 3D-drawing.

To obtain a complete unit, please select the red components from the pages shown.

Actuator, Front dimension Ø 40 mm

Switching action	Lens colour	Front bezel colour	Front bezel material	Front bezel surface	Marking	Operating Travel	Part No.	Wiring diagram
Maintained	Red	Black	Aluminium	anodised	Arrows	ca. 5.8 mm ± 0.2 mm	704.074.210	76
	Red	Nature	Aluminium	anodised	Arrows	ca. 5.8 mm ± 0.2 mm	704.075.218	76
	Red	Black	Aluminium	anodised	Stop	ca. 5.8 mm ± 0.2 mm	704.075.310	76
	Red	Nature	Aluminium	anodised	Stop	ca. 5.8 mm ± 0.2 mm	704.075.318	76

Wiring diagrams

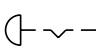

Wiring diagram 76

Pushbutton square, IP67

Equipment consisting of (schematic overview)

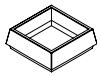
Front bezel

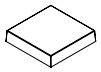
Lens

Lens holder

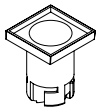
Actuator

Bayonet flange

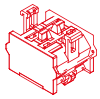
Switching element Page 167

Each Part Number listed below includes all the black components shown in the 3D-drawing.

To obtain a complete unit, please select the red components from the pages shown.

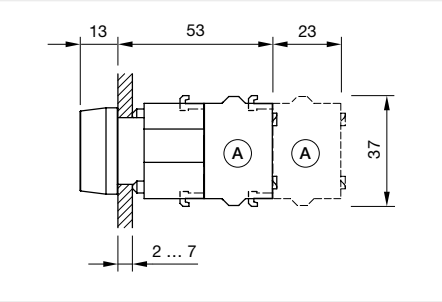

Dimensions [mm]
A = Screw terminal

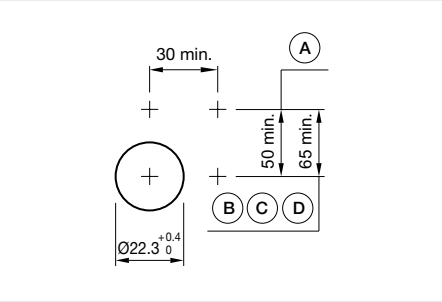

Mounting cut-outs [mm]
A = Screw terminal
B = Push-in terminal (PIT)
C = Plug-in terminal 6.3 mm x 0.8 mm
D = Double plug-in terminal 6.3 mm x 0.8 mm

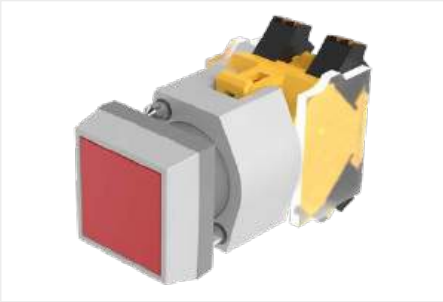

Product can differ from the current configuration.

General information

- Max. 3 switching elements can be clipped on

Actuator, Front dimension 30 mm x 30 mm

Switching action	Front bezel colour	Front bezel material	Lens colour	Lens material	Housing colour	Housing material	Operating Travel	Part No.	Wiring diagram
Momentary	Black	Plastic	Black	Plastic	Black	Plastic	ca. 5.8 mm ± 0.2 mm	704.209.0	72
	Black	Plastic	Red	Plastic	Black	Plastic	ca. 5.8 mm ± 0.2 mm	704.209.2	72
	Black	Plastic	Yellow	Plastic	Black	Plastic	ca. 5.8 mm ± 0.2 mm	704.209.4	72
	Black	Plastic	Green	Plastic	Black	Plastic	ca. 5.8 mm ± 0.2 mm	704.209.5	72
	Black	Plastic	Blue	Plastic	Black	Plastic	ca. 5.8 mm ± 0.2 mm	704.209.6	72
	Black	Plastic	Colourless	Plastic	Black	Plastic	ca. 5.8 mm ± 0.2 mm	704.209.7	72
	Grey	Plastic	Black	Plastic	Black	Plastic	ca. 5.8 mm ± 0.2 mm	704.210.0	72
	Grey	Plastic	Red	Plastic	Black	Plastic	ca. 5.8 mm ± 0.2 mm	704.210.2	72
	Grey	Plastic	Yellow	Plastic	Black	Plastic	ca. 5.8 mm ± 0.2 mm	704.210.4	72
	Grey	Plastic	Green	Plastic	Black	Plastic	ca. 5.8 mm ± 0.2 mm	704.210.5	72
	Grey	Plastic	Blue	Plastic	Black	Plastic	ca. 5.8 mm ± 0.2 mm	704.210.6	72
	Grey	Plastic	Colourless	Plastic	Black	Plastic	ca. 5.8 mm ± 0.2 mm	704.210.7	72

04 Raised design

Switching action	Front bezel colour	Front bezel material	Lens colour	Lens material	Housing colour	Housing material	Operating Travel	Part No.	Wiring diagram
Maintained	Grey	Plastic	Colourless	Plastic	Black	Plastic	ca. 5.8 mm ± 0.2 mm	704.240.7	73

Wiring diagrams

Wiring diagram 72	Wiring diagram 73

Pushbutton round, IP65

Equipment consisting of (schematic overview)

Front bezel

Lens

Marking Plate

Actuator

Bayonet flange

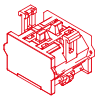
Switching element Page 167

Each Part Number listed below includes all the black components shown in the 3D-drawing.

To obtain a complete unit, please select the red components from the pages shown.

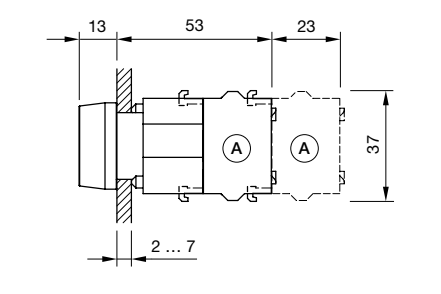

Dimensions [mm]
A = Screw terminal

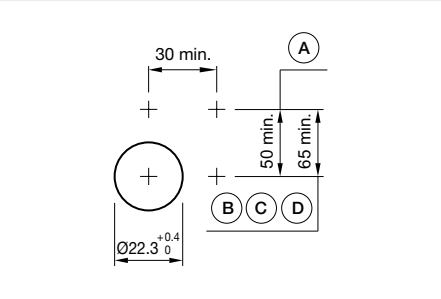

Mounting cut-outs [mm]
A = Screw terminal
B = Push-in terminal (PIT)
C = Plug-in terminal 6.3 mm x 0.8 mm
D = Double plug-in terminal 6.3 mm x 0.8 mm

Product can differ from the current configuration.

General information

- Max. 3 switching elements can be clipped on

Actuator, Front dimension Ø 29 mm

Switching action	Front bezel colour	Front bezel material	Front bezel surface	Lens colour	Lens material	Housing colour	Housing material	Part No.	Wiring diagram
Momentary	Black	Plastic		Black	Plastic	Grey	Plastic	704.009.0	72
	Black	Plastic		Red	Plastic	Grey	Plastic	704.009.2	72
	Black	Plastic		Yellow	Plastic	Grey	Plastic	704.009.4	72
	Black	Plastic		Green	Plastic	Grey	Plastic	704.009.5	72
	Black	Plastic		Blue	Plastic	Grey	Plastic	704.009.6	72
	Black	Plastic		Colourless	Plastic	Grey	Plastic	704.009.7	72
	Grey	Plastic		Black	Plastic	Grey	Plastic	704.010.0	72
	Grey	Plastic		Red	Plastic	Grey	Plastic	704.010.2	72
	Grey	Plastic		Yellow	Plastic	Grey	Plastic	704.010.4	72
	Grey	Plastic		Green	Plastic	Grey	Plastic	704.010.5	72
	Grey	Plastic		Blue	Plastic	Grey	Plastic	704.010.6	72
	Grey	Plastic		Colourless	Plastic	Grey	Plastic	704.010.7	72
	Nature	Aluminium	anodised	Black	Aluminium	Grey	Plastic	704.011.0	72
	Nature	Aluminium	anodised	Red	Aluminium	Grey	Plastic	704.011.2	72
	Nature	Aluminium	anodised	Gold	Aluminium	Grey	Plastic	704.011.4	72
	Nature	Aluminium	anodised	Olive green	Aluminium	Grey	Plastic	704.011.5	72
	Nature	Aluminium	anodised	Blue	Aluminium	Grey	Plastic	704.011.6	72
	Nature	Aluminium	anodised	Nature	Aluminium	Grey	Plastic	704.011.8	72
	Nature	Aluminium	anodised	Black	Plastic	Grey	Plastic	704.012.0	72

04 Raised design

Switching action	Front bezel colour	Front bezel material	Front bezel surface	Lens colour	Lens material	Housing colour	Housing material	Part No.	Wiring diagram
Momentary	Nature	Aluminium	anodised	Red	Plastic	Grey	Plastic	704.012.2	72
	Nature	Aluminium	anodised	Yellow	Plastic	Grey	Plastic	704.012.4	72
	Nature	Aluminium	anodised	Green	Plastic	Grey	Plastic	704.012.5	72
	Nature	Aluminium	anodised	Blue	Plastic	Grey	Plastic	704.012.6	72
	Nature	Aluminium	anodised	Colourless	Plastic	Grey	Plastic	704.012.7	72
Maintained	Black	Plastic		Black	Plastic	Grey	Plastic	704.039.0	73
	Black	Plastic		Red	Plastic	Grey	Plastic	704.039.2	73
	Black	Plastic		Colourless	Plastic	Grey	Plastic	704.039.7	73
	Grey	Plastic		Red	Plastic	Grey	Plastic	704.040.2	73
	Grey	Plastic		Yellow	Plastic	Grey	Plastic	704.040.4	73
	Grey	Plastic		Green	Plastic	Grey	Plastic	704.040.5	73
	Grey	Plastic		Blue	Plastic	Grey	Plastic	704.040.6	73
	Grey	Plastic		Colourless	Plastic	Grey	Plastic	704.040.7	73
	Nature	Aluminium	anodised	Black	Aluminium	Grey	Plastic	704.041.0	73
	Nature	Aluminium	anodised	Red	Aluminium	Grey	Plastic	704.041.2	73
	Nature	Aluminium	anodised	Blue	Aluminium	Grey	Plastic	704.041.6	73
	Nature	Aluminium	anodised	Black	Plastic	Grey	Plastic	704.042.0	73
	Nature	Aluminium	anodised	Red	Plastic	Grey	Plastic	704.042.2	73
	Nature	Aluminium	anodised	Yellow	Plastic	Grey	Plastic	704.042.4	73
	Nature	Aluminium	anodised	Green	Plastic	Grey	Plastic	704.042.5	73
	Nature	Aluminium	anodised	Blue	Plastic	Grey	Plastic	704.042.6	73
	Nature	Aluminium	anodised	Colourless	Plastic	Grey	Plastic	704.042.7	73
Momentary	Nature	Aluminium	anodised	Black	Plastic	Grey	Plastic	704.013.0	72
	Nature	Aluminium	anodised	Red	Plastic	Grey	Plastic	704.013.2	72
	Nature	Aluminium	anodised	Yellow	Plastic	Grey	Plastic	704.013.4	72
	Nature	Aluminium	anodised	Green	Plastic	Grey	Plastic	704.013.5	72
	Nature	Aluminium	anodised	Blue	Plastic	Grey	Plastic	704.013.6	72
	Nature	Aluminium	anodised	Colourless	Plastic	Grey	Plastic	704.013.7	72
Maintained	Nature	Aluminium	anodised	Colourless	Plastic	Grey	Plastic	704.043.7	73

Wiring diagrams

Wiring diagram 72	Wiring diagram 73

Pushbutton square, IP65

Equipment consisting of (schematic overview)

Front bezel Page 156

Lens Page 153

Lens holder Page 155

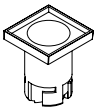
Actuator

Bayonet flange Page 157

Switching element Page 167

Each Part Number listed below includes all the black components shown in the 3D-drawing.

To obtain a complete unit, please select the red components from the pages shown.

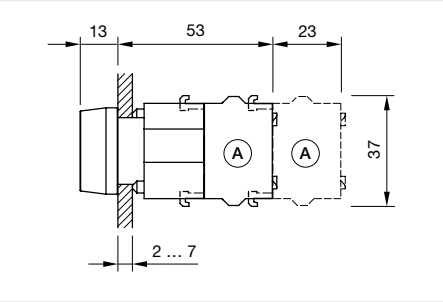

Dimensions [mm]
A = Screw terminal

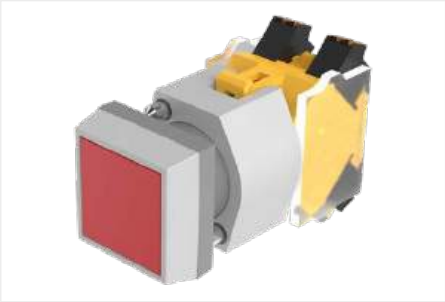

Product can differ from the current configuration.

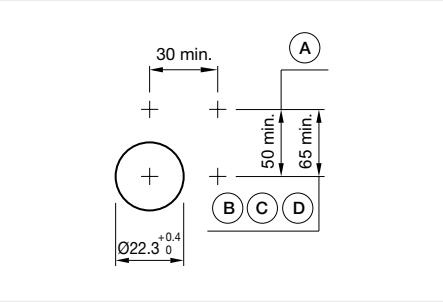

Mounting cut-outs [mm]
A = Screw terminal
B = Push-in terminal (PIT)
C = Plug-in terminal 6.3 mm x 0.8 mm
D = Double plug-in terminal 6.3 mm x 0.8 mm

General information

- Max. 3 switching elements can be clipped on

Actuator, Front dimension 30 mm x 30 mm

Switching action	Housing colour	Housing material	Operating Travel	Part No.	Wiring diagram
Momentary	Black	Plastic	ca. 5.8 mm ± 0.2 mm	704.731.0	72
	Grey	Plastic	ca. 5.8 mm ± 0.2 mm	704.731.1	72
Maintained	Black	Plastic	ca. 5.8 mm ± 0.2 mm	704.732.0	73
	Grey	Plastic	ca. 5.8 mm ± 0.2 mm	704.732.1	73

Wiring diagrams

Wiring diagram 72

Wiring diagram 73

04 Raised design

Pushbutton round, IP65

Product can differ from the current configuration.

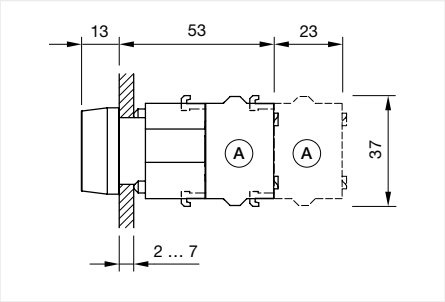

Dimensions [mm]
A = Screw terminal

General information

- Frontring with protective cover to be mounted with a torque of 0.4 Nm onto actuator
- Max. 3 switching elements can be clipped on

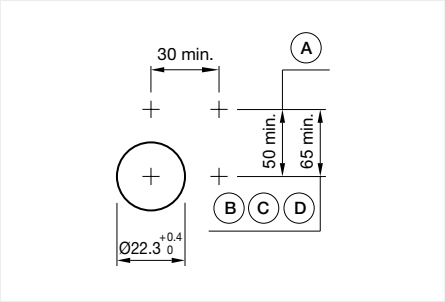

Mounting cut-outs [mm]
A = Screw terminal
B = Push-in terminal (PIT)
C = Plug-in terminal 6.3 mm x 0.8 mm
D = Double plug-in terminal 6.3 mm x 0.8 mm

Equipment consisting of (schematic overview)

Front bezel Page 156

Lens Page 153

Marking Plate Page 155

Actuator

Bayonet flange Page 157

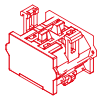
Switching element Page 167

Each Part Number listed below includes all the black components shown in the 3D-drawing.

To obtain a complete unit, please select the red components from the pages shown.

Actuator, Front dimension Ø 29 mm

Switching action	Housing colour	Housing material	Operating Travel	Part No.	Wiring diagram
Momentary	Grey	Plastic	ca. 5.8 mm ± 0.2 mm	704.631.1	72
Maintained	Grey	Plastic	ca. 5.8 mm ± 0.2 mm	704.632.1	73

Wiring diagrams

Wiring diagram 72

Wiring diagram 73

Illuminated pushbutton square, IP65

Equipment consisting of (schematic overview)

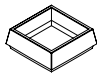
Front bezel

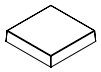
Lens

Lens holder

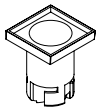
Actuator

Bayonet flange

LED Page 158

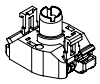
Lamp block

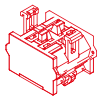
Switching element Page 167

Each Part Number listed below includes all the black components shown in the 3D-drawing.

To obtain a complete unit, please select the red components from the pages shown.

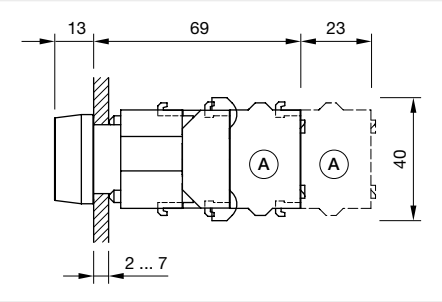

Dimensions [mm]
A = Screw terminal

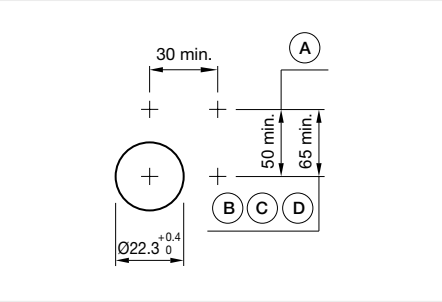

Mounting cut-outs [mm]
A = Screw terminal
B = Push-in terminal (PIT)
C = Plug-in terminal 6.3 mm x 0.8 mm
D = Double plug-in terminal 6.3 mm x 0.8 mm

Product can differ from the current configuration.

General information

- Max. 3 switching elements can be clipped on

Actuator, Front dimension 30 mm x 30 mm

Switching action	Front bezel colour	Front bezel material	Lens colour	Lens material	Housing colour	Housing material	Operating Travel	Part No.	Wiring diagram
Momentary	Black	Plastic	Red	Plastic	Black	Plastic	ca. 5.8 mm ± 0.2 mm	704.229.2	74
	Black	Plastic	Green	Plastic	Black	Plastic	ca. 5.8 mm ± 0.2 mm	704.229.5	74
	Black	Plastic	Blue	Plastic	Black	Plastic	ca. 5.8 mm ± 0.2 mm	704.229.6	74
	Black	Plastic	Colourless	Plastic	Black	Plastic	ca. 5.8 mm ± 0.2 mm	704.229.7	74
	Grey	Plastic	Red	Plastic	Black	Plastic	ca. 5.8 mm ± 0.2 mm	704.230.2	74
	Grey	Plastic	Yellow	Plastic	Black	Plastic	ca. 5.8 mm ± 0.2 mm	704.230.4	74
	Grey	Plastic	Green	Plastic	Black	Plastic	ca. 5.8 mm ± 0.2 mm	704.230.5	74
	Grey	Plastic	Blue	Plastic	Black	Plastic	ca. 5.8 mm ± 0.2 mm	704.230.6	74
	Grey	Plastic	Colourless	Plastic	Black	Plastic	ca. 5.8 mm ± 0.2 mm	704.230.7	74

04 Raised design

Switching action	Front bezel colour	Front bezel material	Lens colour	Lens material	Housing colour	Housing material	Operating Travel	Part No.	Wiring diagram
Maintained	Black	Plastic	Red	Plastic	Black	Plastic	ca. 5.8 mm ± 0.2 mm	704.259.2	75
	Black	Plastic	Yellow	Plastic	Black	Plastic	ca. 5.8 mm ± 0.2 mm	704.259.4	75
	Black	Plastic	Green	Plastic	Black	Plastic	ca. 5.8 mm ± 0.2 mm	704.259.5	75
	Black	Plastic	Blue	Plastic	Black	Plastic	ca. 5.8 mm ± 0.2 mm	704.259.6	75
	Black	Plastic	Colourless	Plastic	Black	Plastic	ca. 5.8 mm ± 0.2 mm	704.259.7	75
	Grey	Plastic	Red	Plastic	Black	Plastic	ca. 5.8 mm ± 0.2 mm	704.260.2	75
	Grey	Plastic	Yellow	Plastic	Black	Plastic	ca. 5.8 mm ± 0.2 mm	704.260.4	75
	Grey	Plastic	Green	Plastic	Black	Plastic	ca. 5.8 mm ± 0.2 mm	704.260.5	75
	Grey	Plastic	Blue	Plastic	Black	Plastic	ca. 5.8 mm ± 0.2 mm	704.260.6	75
	Grey	Plastic	Colourless	Plastic	Black	Plastic	ca. 5.8 mm ± 0.2 mm	704.260.7	75

Wiring diagrams

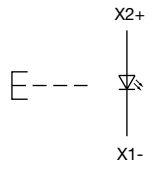

Wiring diagram 74

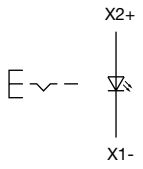

Wiring diagram 75

Illuminated pushbutton round, IP65

Equipment consisting of (schematic overview)

Front bezel

Lens

Marking Plate

Actuator

Bayonet flange

LED Page 158

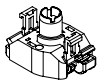
Lamp block

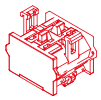
Switching element Page 167

Each Part Number listed below includes all the black components shown in the 3D-drawing.

To obtain a complete unit, please select the red components from the pages shown.

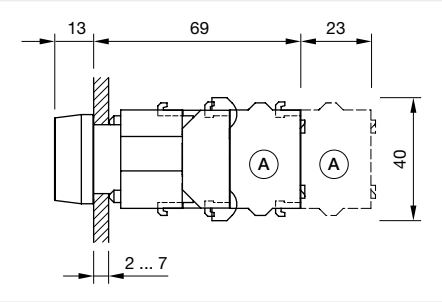

Dimensions [mm]
A = Screw terminal

Product can differ from the current configuration.

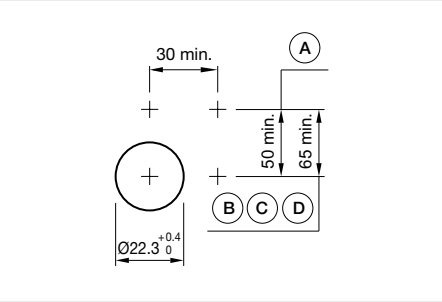

Mounting cut-outs [mm]
A = Screw terminal
B = Push-in terminal (PIT)
C = Plug-in terminal 6.3 mm x 0.8 mm
D = Double plug-in terminal 6.3 mm x 0.8 mm

General information

- Frontring with protective cover to be mounted with a torque of 0.4 Nm onto actuator
- Max. 3 switching elements can be clipped on
- The colour of anodised aluminium parts can vary due to technical production reasons

Actuator, Front dimension Ø 29 mm

Switching action	Front bezel colour	Front bezel material	Front bezel surface	Lens colour	Lens material	Housing colour	Housing material	Operating Travel	Part No.	Wiring diagram
Momentary	Black	Plastic		Red	Plastic	Grey	Plastic	ca. 5.8 mm ± 0.2 mm	704.029.2	74
	Black	Plastic		Yellow	Plastic	Grey	Plastic	ca. 5.8 mm ± 0.2 mm	704.029.4	74
	Black	Plastic		Green	Plastic	Grey	Plastic	ca. 5.8 mm ± 0.2 mm	704.029.5	74
	Black	Plastic		Blue	Plastic	Grey	Plastic	ca. 5.8 mm ± 0.2 mm	704.029.6	74
	Black	Plastic		Colourless	Plastic	Grey	Plastic	ca. 5.8 mm ± 0.2 mm	704.029.7	74
	Grey	Plastic		Red	Plastic	Grey	Plastic	ca. 5.8 mm ± 0.2 mm	704.030.2	74
	Grey	Plastic		Yellow	Plastic	Grey	Plastic	ca. 5.8 mm ± 0.2 mm	704.030.4	74
	Grey	Plastic		Green	Plastic	Grey	Plastic	ca. 5.8 mm ± 0.2 mm	704.030.5	74
	Grey	Plastic		Blue	Plastic	Grey	Plastic	ca. 5.8 mm ± 0.2 mm	704.030.6	74
	Grey	Plastic		Colourless	Plastic	Grey	Plastic	ca. 5.8 mm ± 0.2 mm	704.030.7	74

04 Raised design

Switching action	Front bezel colour	Front bezel material	Front bezel surface	Lens colour	Lens material	Housing colour	Housing material	Operating Travel	Part No.	Wiring diagram
Momentary	Nature	Aluminium	anodised	Red	Plastic	Grey	Plastic	ca. 5.8 mm ± 0.2 mm	704.032.2	74
	Nature	Aluminium	anodised	Yellow	Plastic	Grey	Plastic	ca. 5.8 mm ± 0.2 mm	704.032.4	74
	Nature	Aluminium	anodised	Green	Plastic	Grey	Plastic	ca. 5.8 mm ± 0.2 mm	704.032.5	74
	Nature	Aluminium	anodised	Blue	Plastic	Grey	Plastic	ca. 5.8 mm ± 0.2 mm	704.032.6	74
	Nature	Aluminium	anodised	Colourless	Plastic	Grey	Plastic	ca. 5.8 mm ± 0.2 mm	704.032.7	74
	Nature	Aluminium	anodised	Red	Plastic	Grey	Plastic	ca. 5.8 mm ± 0.2 mm	704.033.2	74
	Nature	Aluminium	anodised	Yellow	Plastic	Grey	Plastic	ca. 5.8 mm ± 0.2 mm	704.033.4	74
	Nature	Aluminium	anodised	Green	Plastic	Grey	Plastic	ca. 5.8 mm ± 0.2 mm	704.033.5	74
	Nature	Aluminium	anodised	Blue	Plastic	Grey	Plastic	ca. 5.8 mm ± 0.2 mm	704.033.6	74
	Nature	Aluminium	anodised	Colourless	Plastic	Grey	Plastic	ca. 5.8 mm ± 0.2 mm	704.033.7	74
Maintained	Black	Plastic		Red	Plastic	Grey	Plastic	ca. 5.8 mm ± 0.2 mm	704.059.2	75
	Black	Plastic		Yellow	Plastic	Grey	Plastic	ca. 5.8 mm ± 0.2 mm	704.059.4	75
	Black	Plastic		Green	Plastic	Grey	Plastic	ca. 5.8 mm ± 0.2 mm	704.059.5	75
	Black	Plastic		Colourless	Plastic	Grey	Plastic	ca. 5.8 mm ± 0.2 mm	704.059.7	75
	Grey	Plastic		Red	Plastic	Grey	Plastic	ca. 5.8 mm ± 0.2 mm	704.060.2	75
	Grey	Plastic		Yellow	Plastic	Grey	Plastic	ca. 5.8 mm ± 0.2 mm	704.060.4	75
	Grey	Plastic		Green	Plastic	Grey	Plastic	ca. 5.8 mm ± 0.2 mm	704.060.5	75
	Grey	Plastic		Blue	Plastic	Grey	Plastic	ca. 5.8 mm ± 0.2 mm	704.060.6	75
	Grey	Plastic		Colourless	Plastic	Grey	Plastic	ca. 5.8 mm ± 0.2 mm	704.060.7	75
	Nature	Aluminium	anodised	Red	Plastic	Grey	Plastic	ca. 5.8 mm ± 0.2 mm	704.062.2	75
	Nature	Aluminium	anodised	Yellow	Plastic	Grey	Plastic	ca. 5.8 mm ± 0.2 mm	704.062.4	75
	Nature	Aluminium	anodised	Green	Plastic	Grey	Plastic	ca. 5.8 mm ± 0.2 mm	704.062.5	75
	Nature	Aluminium	anodised	Blue	Plastic	Grey	Plastic	ca. 5.8 mm ± 0.2 mm	704.062.6	75
	Nature	Aluminium	anodised	Colourless	Plastic	Grey	Plastic	ca. 5.8 mm ± 0.2 mm	704.062.7	75
	Nature	Aluminium	anodised	Red	Plastic	Grey	Plastic	ca. 5.8 mm ± 0.2 mm	704.063.2	75
	Nature	Aluminium	anodised	Green	Plastic	Grey	Plastic	ca. 5.8 mm ± 0.2 mm	704.063.5	75
	Nature	Aluminium	anodised	Colourless	Plastic	Grey	Plastic	ca. 5.8 mm ± 0.2 mm	704.063.7	75

Wiring diagrams

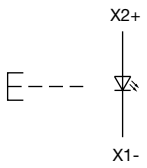 Wiring diagram 74	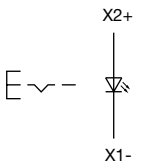 Wiring diagram 75

Illuminated pushbutton square, IP65

Product can differ from the current configuration.

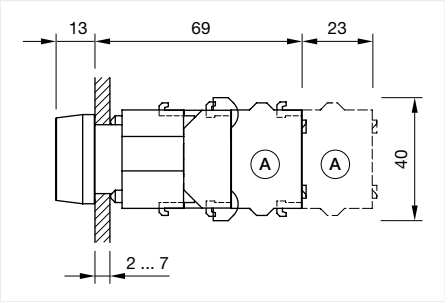

Dimensions [mm]
A = Screw terminal

General information

- Frontring with protective cover to be mounted with a torque of 0.4 Nm onto actuator
- Max. 3 switching elements can be clipped on

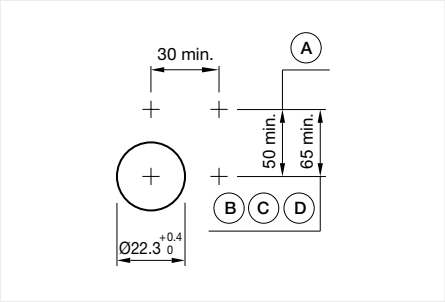

Mounting cut-outs [mm]
A = Screw terminal
B = Push-in terminal (PIT)
C = Plug-in terminal 6.3 mm x 0.8 mm
D = Double plug-in terminal 6.3 mm x 0.8 mm

Equipment consisting of (schematic overview)

Front bezel Page 156

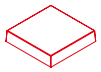
Lens Page 153

Lens holder Page 155

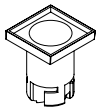
Actuator

Bayonet flange Page 157

LED Page 158

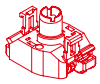
Lamp block Page 164

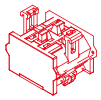
Switching element Page 167

Each Part Number listed below includes all the black components shown in the 3D-drawing.

To obtain a complete unit, please select the red components from the pages shown.

Actuator, Front dimension 30 mm x 30 mm

Switching action	Housing colour	Housing material	Operating Travel	Part No.	Wiring diagram
Momentary	Black	Plastic	ca. 5.8 mm ± 0.2 mm	704.731.0	72
	Grey	Plastic	ca. 5.8 mm ± 0.2 mm	704.731.1	72
Maintained	Black	Plastic	ca. 5.8 mm ± 0.2 mm	704.732.0	73
	Grey	Plastic	ca. 5.8 mm ± 0.2 mm	704.732.1	73

Wiring diagrams

Wiring diagram 72	Wiring diagram 73

Illuminated pushbutton round, IP65

Product can differ from the current configuration.

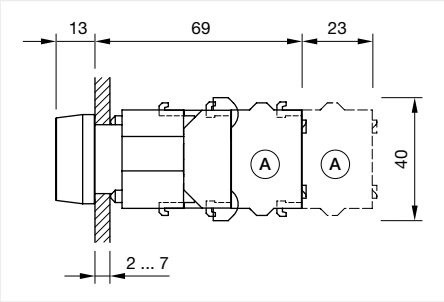

Dimensions [mm]
A = Screw terminal

General information

- Frontring with protective cover to be mounted with a torque of 0.4 Nm onto actuator
- Max. 3 switching elements can be clipped on

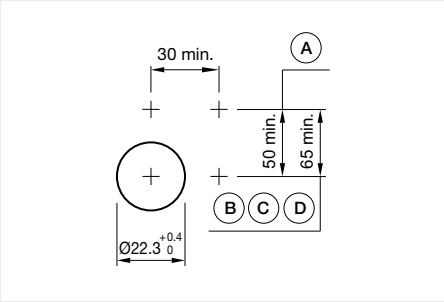

Mounting cut-outs [mm]
A = Screw terminal
B = Push-in terminal (PIT)
C = Plug-in terminal 6.3 mm x 0.8 mm
D = Double plug-in terminal 6.3 mm x 0.8 mm

Equipment consisting of (schematic overview)

Front bezel Page 156

Lens Page 153

Marking Plate Page 155

Actuator

Bayonet flange Page 157

LED Page 158

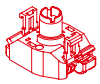
Lamp block Page 164

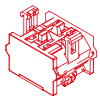
Switching element Page 167

Each Part Number listed below includes all the black components shown in the 3D-drawing.

To obtain a complete unit, please select the red components from the pages shown.

Actuator, Front dimension Ø 29 mm

Switching action	Housing colour	Housing material	Operating Travel	Part No.	Wiring diagram
Momentary	Grey	Plastic	ca. 5.8 mm ± 0.2 mm	704.631.1	72
Maintained	Grey	Plastic	ca. 5.8 mm ± 0.2 mm	704.632.1	73

Wiring diagrams

Wiring diagram 72

Wiring diagram 73

Mushroom-head pushbutton, IP65

Equipment consisting of (schematic overview)

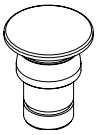

Actuator

Bayonet flange

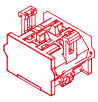

Switching element Page 167

Each Part Number listed below includes all the black components shown in the 3D-drawing.

To obtain a complete unit, please select the red components from the pages shown.

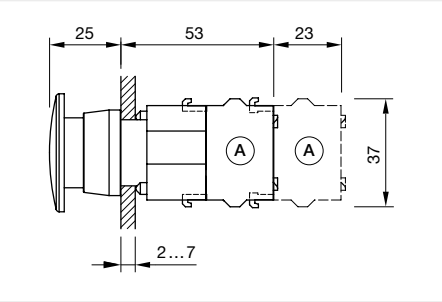

Dimensions [mm]
A = Screw terminal

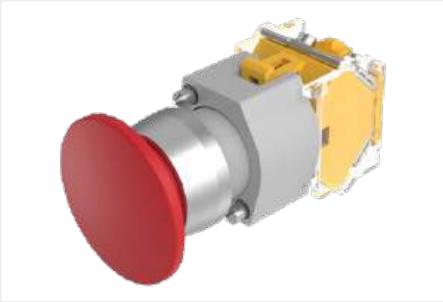

Product can differ from the current configuration.

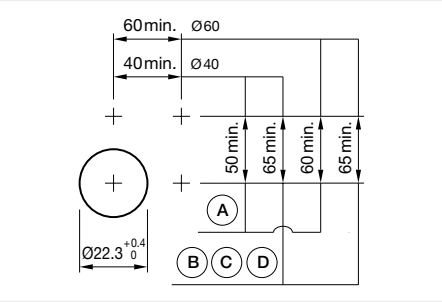

Mounting cut-outs [mm]
A = Screw terminal
B = Push-in terminal (PIT)
C = Plug-in terminal 6.3 mm x 0.8 mm
D = Double plug-in terminal 6.3 mm x 0.8 mm

General information

- Max. 3 switching elements can be clipped on
- The colour of anodised aluminium parts can vary due to technical production reasons

Actuator, Front dimension Ø 40 mm

Switching action	Front bezel colour	Front bezel material	Front bezel surface	Lens colour	Lens material	Housing colour	Housing material	Part No.	Wiring diagram
Momentary	Grey	Plastic		Black	Plastic	Grey	Plastic	704.070.0	72
	Grey	Plastic		Red	Plastic	Grey	Plastic	704.070.2	72
	Grey	Plastic		Yellow	Plastic	Grey	Plastic	704.070.4	72
	Grey	Plastic		Green	Plastic	Grey	Plastic	704.070.5	72
	Nature	Aluminium	anodised	Black	Plastic	Grey	Plastic	704.071.0	72
	Nature	Aluminium	anodised	Red	Plastic	Grey	Plastic	704.071.2	72
	Nature	Aluminium	anodised	Yellow	Plastic	Grey	Plastic	704.071.4	72
	Nature	Aluminium	anodised	Green	Plastic	Grey	Plastic	704.071.5	72
Maintained	Grey	Plastic		Black	Plastic	Grey	Plastic	704.072.0	73
	Grey	Plastic		Red	Plastic	Grey	Plastic	704.072.2	73
	Nature	Aluminium	anodised	Black	Plastic	Grey	Plastic	704.073.0	73
	Nature	Aluminium	anodised	Red	Plastic	Grey	Plastic	704.073.2	73
	Nature	Aluminium	anodised	Yellow	Plastic	Grey	Plastic	704.073.4	73
	Nature	Aluminium	anodised	Green	Plastic	Grey	Plastic	704.073.5	73

Wiring diagrams

Wiring diagram 72	Wiring diagram 73

Mushroom-head pushbutton illuminated, IP65

Equipment consisting of (schematic overview)

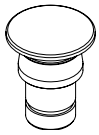

Actuator

Bayonet flange

LED Page 158

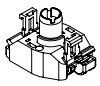

Lamp block

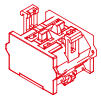

Switching element Page 167

Each Part Number listed below includes all the black components shown in the 3D-drawing.

To obtain a complete unit, please select the red components from the pages shown.

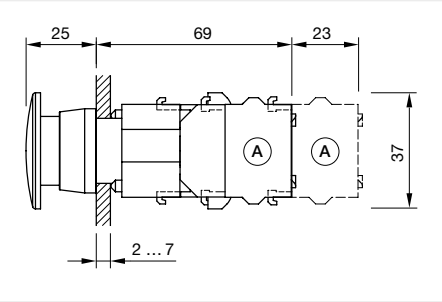

Dimensions [mm]
A = Screw terminal

Product can differ from the current configuration.

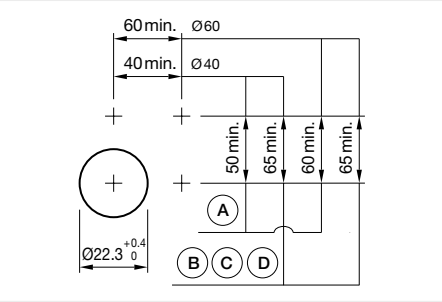

Mounting cut-outs [mm]
A = Screw terminal
B = Push-in terminal (PIT)
C = Plug-in terminal 6.3 mm x 0.8 mm
D = Double plug-in terminal 6.3 mm x 0.8 mm

General information

- Max. 3 switching elements can be clipped on
- The lamp block will be delivered with screw terminal

Actuator, Front dimension Ø 40 mm

Switching action	Front bezel colour	Front bezel material	Lens colour	Lens material	Housing colour	Housing material	Part No.	Wiring diagram
Momentary	Grey	Plastic	Red	Plastic	Grey	Plastic	704.084.2	74
	Grey	Plastic	Yellow	Plastic	Grey	Plastic	704.084.4	74
	Grey	Plastic	Green	Plastic	Grey	Plastic	704.084.5	74
	Grey	Plastic	Blue	Plastic	Grey	Plastic	704.084.6	74
	Grey	Plastic	Colourless	Plastic	Grey	Plastic	704.084.7	74
Maintained	Grey	Plastic	Red	Plastic	Grey	Plastic	704.086.2	75
	Grey	Plastic	Yellow	Plastic	Grey	Plastic	704.086.4	75
	Grey	Plastic	Green	Plastic	Grey	Plastic	704.086.5	75

Wiring diagrams

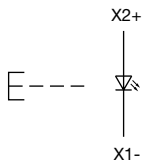

Wiring diagram 74

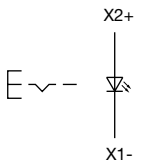

Wiring diagram 75

Selector switch illuminated, 2 positions, short lever, square, IP65

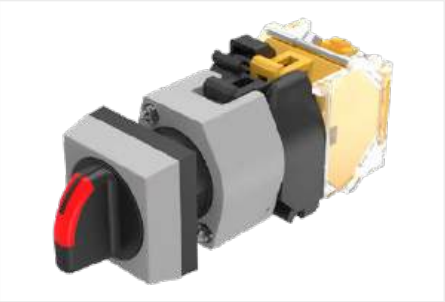

Product can differ from the current configuration.

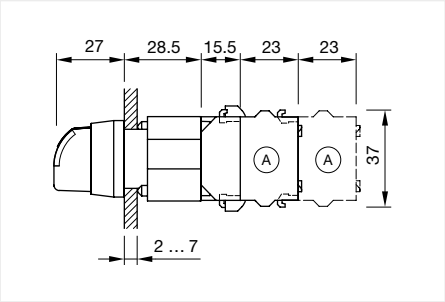

Dimensions [mm]
A = Screw terminal

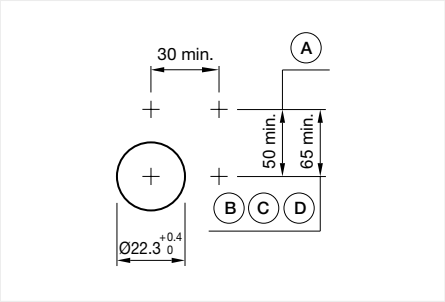

Mounting cut-outs [mm]
A = Screw terminal
B = Push-in terminal (PIT)
C = Plug-in terminal 6.3 mm x 0.8 mm
D = Double plug-in terminal 6.3 mm x 0.8 mm

General information

- Max. 3 switching elements can be clipped on

Equipment consisting of (schematic overview)

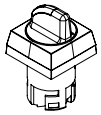

Actuator

Bayonet flange

LED Page 158

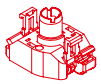

Lamp block Page 164

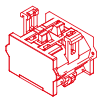

Switching element Page 167

Each Part Number listed below includes all the black components shown in the 3D-drawing.

To obtain a complete unit, please select the red components from the pages shown.

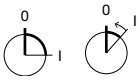

Actuator, Front dimension 30 mm x 30 mm

Switching action	Front bezel colour	Front bezel material	Switching angle	Part No.	Wiring diagram
Rest - Maintained	Grey	Plastic	90° right	704.510.0I	85

Wiring diagrams

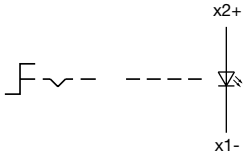

Wiring diagram 84

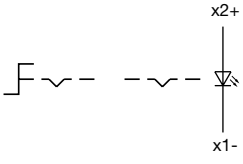

Wiring diagram 85

Selector switch illuminated, 2 positions, short lever, round, IP65

Equipment consisting of (schematic overview)

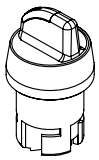

Actuator

Bayonet flange

LED Page 158

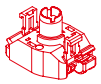

Lamp block Page 164

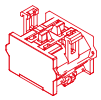

Switching element Page 167

Each Part Number listed below includes all the black components shown in the 3D-drawing.

To obtain a complete unit, please select the red components from the pages shown.

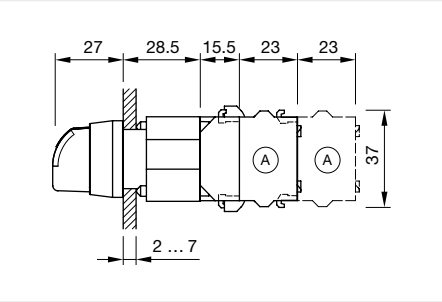

Dimensions [mm]
A = Screw terminal

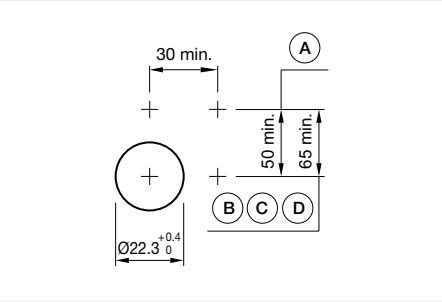

Mounting cut-outs [mm]
A = Screw terminal
B = Push-in terminal (PIT)
C = Plug-in terminal 6.3 mm x 0.8 mm
D = Double plug-in terminal 6.3 mm x 0.8 mm

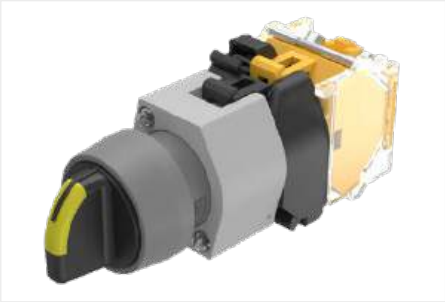

Product can differ from the current configuration.

General information

- Max. 3 switching elements can be clipped on
- The colour of anodised aluminium parts can vary due to technical production reasons

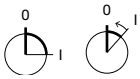

Actuator, Front dimension Ø 29 mm

Switching action	Front bezel colour	Front bezel material	Switching angle	Front bezel surface	Part No.	Wiring diagram
Rest - Maintained	Grey	Plastic	90° right		704.410.0I	85
	Nature	Aluminium	90° right	anodised	704.411.0I	85
Rest - Momentary	Grey	Plastic	42° right		704.412.0I	84
	Nature	Aluminium	42° right	anodised	704.413.0I	84

Wiring diagrams

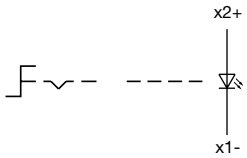

Wiring diagram 84

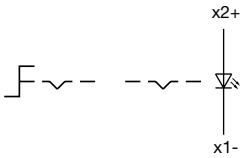

Wiring diagram 85

04 Raised design

Selector switch 2 positions, short lever, square, IP65

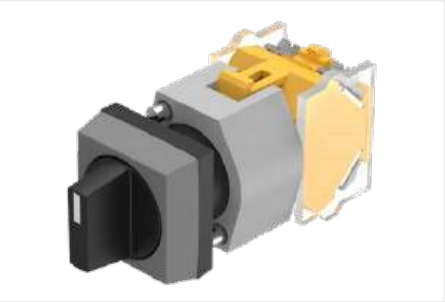

Product can differ from the current configuration.

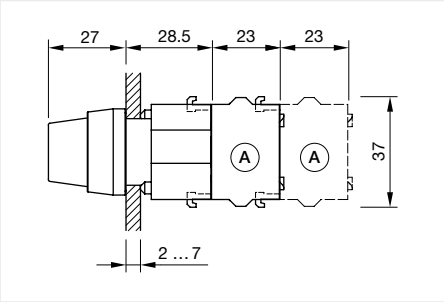

Dimensions [mm]
A = Screw terminal

General information

- Max. 3 switching elements can be clipped on

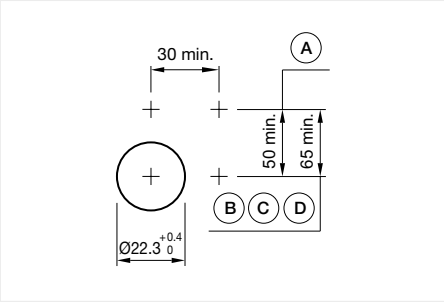

Mounting cut-outs [mm]
A = Screw terminal
B = Push-in terminal (PIT)
C = Plug-in terminal 6.3 mm x 0.8 mm
D = Double plug-in terminal 6.3 mm x 0.8 mm

Equipment consisting of (schematic overview)

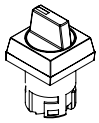

Actuator

Bayonet flange

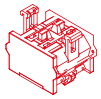

Switching element Page 167

Each Part Number listed below includes all the black components shown in the 3D-drawing.

To obtain a complete unit, please select the red components from the pages shown.

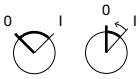

Actuator, Front dimension 30 mm x 30 mm

Switching action	Front bezel colour	Front bezel material	Switching angle	Part No.	Wiring diagram
Rest - Maintained	Grey	Plastic	90° right / -45° … +45°	704.510.0	87
Rest - Momentary	Grey	Plastic	42° right	704.512.0	86

Wiring diagrams

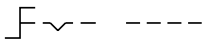

Wiring diagram 86

Wiring diagram 87

Selector switch 2 positions, short lever, round, IP65

Equipment consisting of (schematic overview)

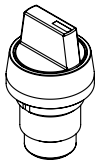

Actuator

Bayonet flange

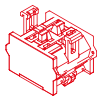

Switching element Page 167

Each Part Number listed below includes all the black components shown in the 3D-drawing.

To obtain a complete unit, please select the red components from the pages shown.

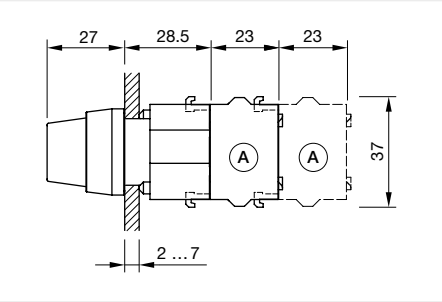

Dimensions [mm]
A = Screw terminal

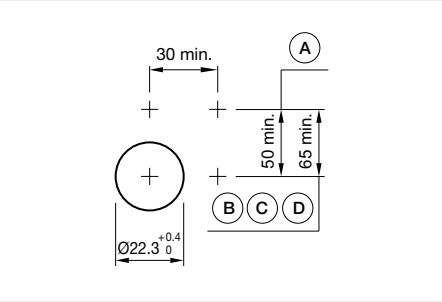

Mounting cut-outs [mm]
A = Screw terminal
B = Push-in terminal (PIT)
C = Plug-in terminal 6.3 mm x 0.8 mm
D = Double plug-in terminal 6.3 mm x 0.8 mm

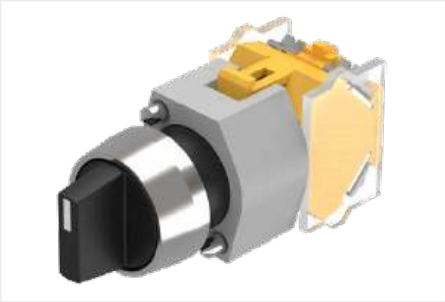

Product can differ from the current configuration.

General information

- Max. 3 switching elements can be clipped on
- The colour of anodised aluminium parts can vary due to technical production reasons

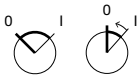

Actuator, Front dimension Ø 29 mm

Switching action	Front bezel colour	Front bezel material	Switching angle	Front bezel surface	Part No.	Wiring diagram
Rest - Maintained	Grey	Plastic	90° right / -45° … +45°		704.410.0	87
	Nature	Aluminium	90° right / -45° … +45°	anodised	704.411.0	87
Rest - Momentary	Grey	Plastic	42° right		704.412.0	86
	Nature	Aluminium	42° right	anodised	704.413.0	86

Wiring diagrams

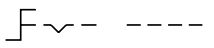

Wiring diagram 86

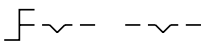

Wiring diagram 87

Selector switch 2 positions, short lever, square, IP65

Product can differ from the current configuration.

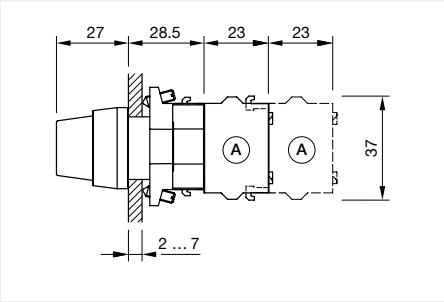

Dimensions [mm]
A = Screw terminal

General information

- Max. 3 switching elements can be clipped on

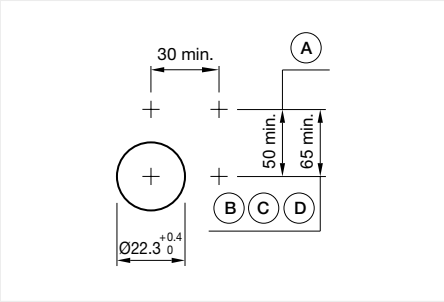

Mounting cut-outs [mm]
A = Screw terminal
B = Push-in terminal (PIT)
C = Plug-in terminal 6.3 mm x 0.8 mm
D = Double plug-in terminal 6.3 mm x 0.8 mm

Equipment consisting of (schematic overview)

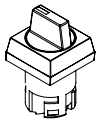

Actuator

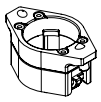

Bayonet flange

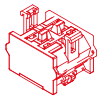

Switching element Page 167

Each Part Number listed below includes all the black components shown in the 3D-drawing.

To obtain a complete unit, please select the red components from the pages shown.

Actuator, Front dimension 30 mm x 30 mm

Switching action	Front bezel colour	Front bezel material	Switching angle	Part No.	Wiring diagram
Rest - Maintained	Grey	Plastic	90° right	704.510.0.12	87

Wiring diagrams

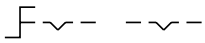

Wiring diagram 87

Selector switch 2 positions, short lever, round, IP65

Equipment consisting of (schematic overview)

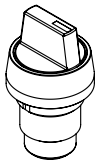

Actuator

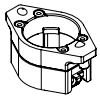

Bayonet flange

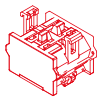

Switching element Page 167

Each Part Number listed below includes all the black components shown in the 3D-drawing.

To obtain a complete unit, please select the red components from the pages shown.

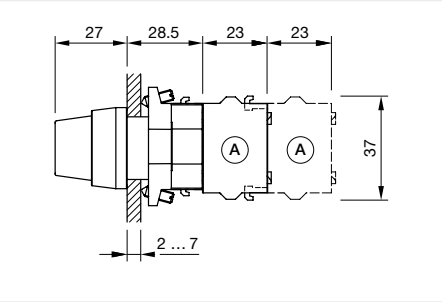

Dimensions [mm]
A = Screw terminal

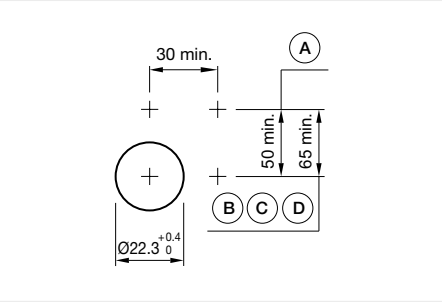

Mounting cut-outs [mm]
A = Screw terminal
B = Push-in terminal (PIT)
C = Plug-in terminal 6.3 mm x 0.8 mm
D = Double plug-in terminal 6.3 mm x 0.8 mm

Product can differ from the current configuration.

General information

- Max. 3 switching elements can be clipped on
- The colour of anodised aluminium parts can vary due to technical production reasons

Actuator, Front dimension Ø 29 mm

Switching action	Front bezel colour	Front bezel material	Switching angle	Front bezel surface	Part No.	Wiring diagram
Rest - Maintained	Grey	Plastic	90° right		704.410.0.12	87
	Nature	Aluminium	90° right	anodised	704.411.0.12	87

Wiring diagrams

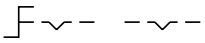

Wiring diagram 87

Selector switch illuminated, 2 positions, long lever, square, IP65

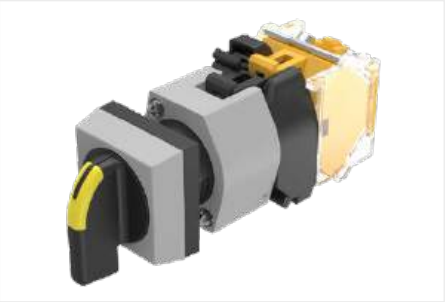

Product can differ from the current configuration.

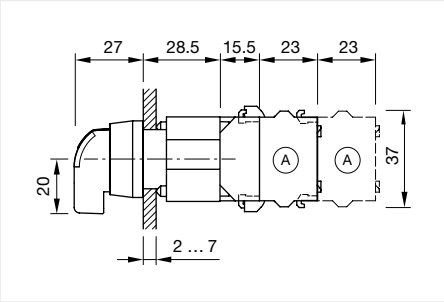

Dimensions [mm]
A = Screw terminal

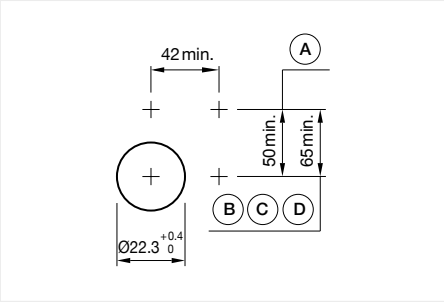

Mounting cut-outs [mm]
A = Screw terminal
B = Push-in terminal (PIT)
C = Plug-in terminal 6.3 mm x 0.8 mm
D = Double plug-in terminal 6.3 mm x 0.8 mm

General information

- Max. 3 switching elements can be clipped on

Equipment consisting of (schematic overview)

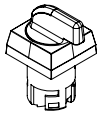

Actuator

Bayonet flange

LED Page 158

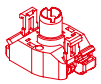

Lamp block Page 164

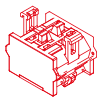

Switching element Page 167

Each Part Number listed below includes all the black components shown in the 3D-drawing.

To obtain a complete unit, please select the red components from the pages shown.

Actuator, Front dimension 30 mm x 30 mm

Switching action	Front bezel colour	Front bezel material	Switching angle	Part No.	Wiring diagram
Rest - Maintained	Grey	Plastic	90° right	704.300.0I	85

Wiring diagrams

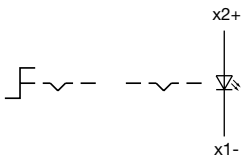

Wiring diagram 85

Selector switch illuminated, 2 positions, long lever, round, IP65

Equipment consisting of (schematic overview)

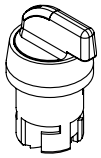

Actuator

Bayonet flange

LED Page 158

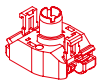

Lamp block Page 164

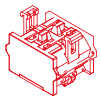

Switching element Page 167

Each Part Number listed below includes all the black components shown in the 3D-drawing.

To obtain a complete unit, please select the red components from the pages shown.

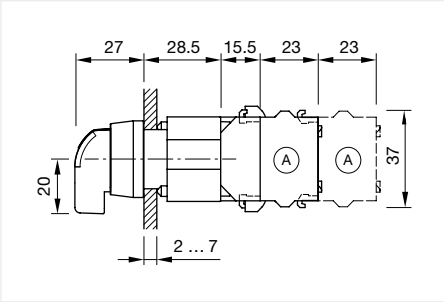

Dimensions [mm]
A = Screw terminal

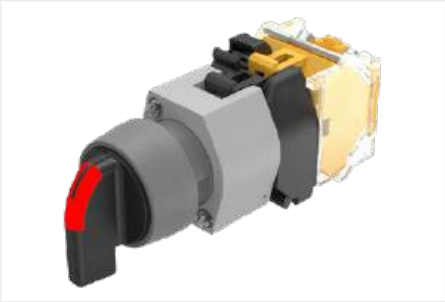

Product can differ from the current configuration.

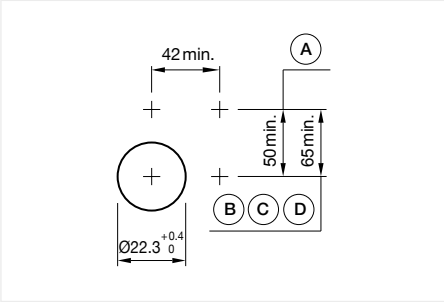

Mounting cut-outs [mm]
A = Screw terminal
B = Push-in terminal (PIT)
C = Plug-in terminal 6.3 mm x 0.8 mm
D = Double plug-in terminal 6.3 mm x 0.8 mm

General information

- Max. 3 switching elements can be clipped on
- The colour of anodised aluminium parts can vary due to technical production reasons

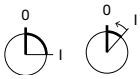

Front dimension Ø 29 mm

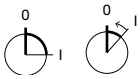

Actuator, Front dimension Ø 29 mm

Switching action	Front bezel colour	Front bezel material	Switching angle	Front bezel surface	Part No.	Wiring diagram
Rest - Maintained	Grey	Plastic	90° right		704.100.0I	85
	Nature	Aluminium	90° right	anodised	704.101.0I	85
Rest - Momentary	Grey	Plastic	42° right		704.102.0I	84
	Nature	Aluminium	42° right	anodised	704.103.0I	84

Wiring diagrams

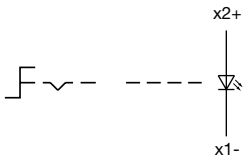

Wiring diagram 84

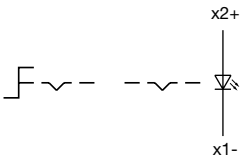

Wiring diagram 85

Selector switch 2 positions, long lever, square, IP65

Equipment consisting of (schematic overview)

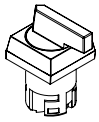
Actuator

Bayonet flange

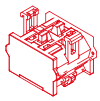
Switching element Page 167

Each Part Number listed below includes all the black components shown in the 3D-drawing.

To obtain a complete unit, please select the red components from the pages shown.

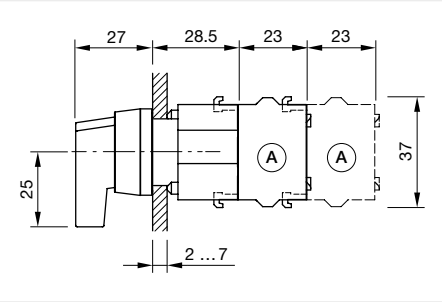

Dimensions [mm]
A = Screw terminal

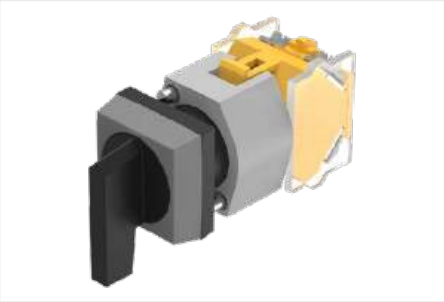

Product can differ from the current configuration.

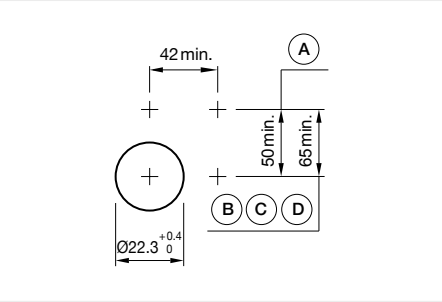

Mounting cut-outs [mm]
A = Screw terminal
B = Push-in terminal (PIT)
C = Plug-in terminal 6.3 mm x 0.8 mm
D = Double plug-in terminal 6.3 mm x 0.8 mm

General information

- Max. 3 switching elements can be clipped on

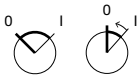

Actuator, Front dimension 30 mm x 30 mm

Switching action	Front bezel colour	Front bezel material	Switching angle	Part No.	Wiring diagram
Rest - Maintained	Grey	Plastic	90° right / -45° … +45°	704.300.0	87
Rest - Momentary	Grey	Plastic	42° right	704.302.0	86

Wiring diagrams

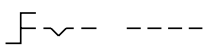
Wiring diagram 86

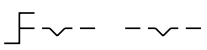
Wiring diagram 87

Selector switch 2 positions, long lever, round, IP65

Product can differ from the current configuration.

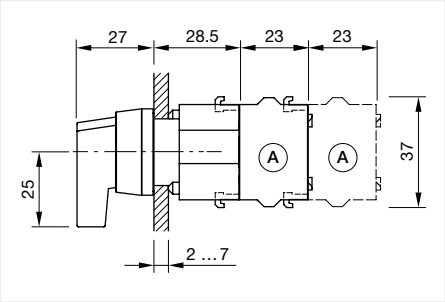

Dimensions [mm]
A = Screw terminal

General information

- Max. 3 switching elements can be clipped on
- The colour of anodised aluminium parts can vary due to technical production reasons

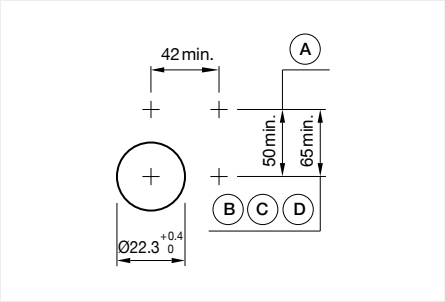

Mounting cut-outs [mm]
A = Screw terminal
B = Push-in terminal (PIT)
C = Plug-in terminal 6.3 mm x 0.8 mm
D = Double plug-in terminal 6.3 mm x 0.8 mm

Equipment consisting of (schematic overview)

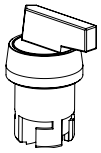

Actuator

Bayonet flange

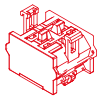

Switching element Page 167

Each Part Number listed below includes all the black components shown in the 3D-drawing.

To obtain a complete unit, please select the red components from the pages shown.

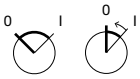

Actuator, Front dimension Ø 29 mm

Switching action	Front bezel colour	Front bezel material	Switching angle	Front bezel surface	Part No.	Wiring diagram
Rest - Maintained	Grey	Plastic	90° right / -45° … +45°		704.100.0	87
	Nature	Aluminium	90° right / -45° … +45°	anodised	704.101.0	87
Rest - Momentary	Grey	Plastic	42° right		704.102.0	86
	Nature	Aluminium	42° right	anodised	704.103.0	86

Wiring diagrams

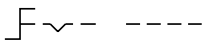

Wiring diagram 86

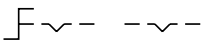

Wiring diagram 87

Selector switch 2 positions, long lever, square, IP65

Equipment consisting of (schematic overview)

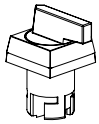

Actuator

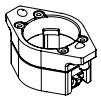

Bayonet flange

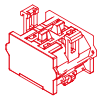

Switching element Page 167

Each Part Number listed below includes all the black components shown in the 3D-drawing.

To obtain a complete unit, please select the red components from the pages shown.

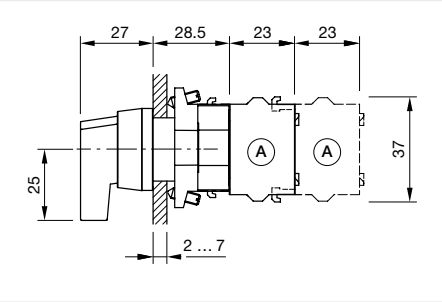

Dimensions [mm]
A = Screw terminal

Product can differ from the current configuration.

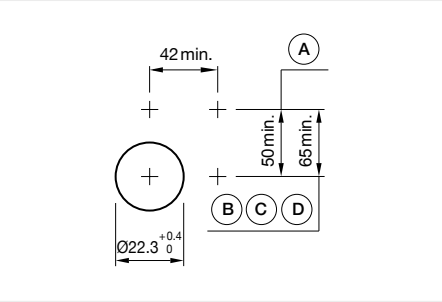

Mounting cut-outs [mm]
A = Screw terminal
B = Push-in terminal (PIT)
C = Plug-in terminal 6.3 mm x 0.8 mm
D = Double plug-in terminal 6.3 mm x 0.8 mm

General information

- Max. 3 switching elements can be clipped on

Actuator, Front dimension 30 mm x 30 mm

Switching action	Front bezel colour	Front bezel material	Switching angle	Part No.	Wiring diagram
Rest - Maintained	Grey	Plastic	90° right	704.300.0.12	87

Wiring diagrams

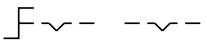

Wiring diagram 87

04 Raised design

Selector switch 2 positions, long lever, round, IP65

Product can differ from the current configuration.

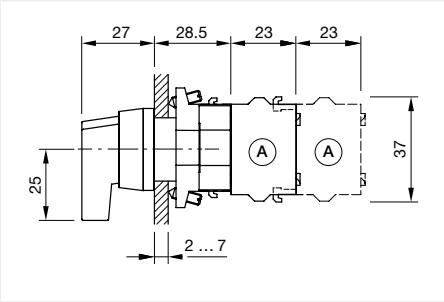

Dimensions [mm]
A = Screw terminal

General information

- Max. 3 switching elements can be clipped on
- The colour of anodised aluminium parts can vary due to technical production reasons

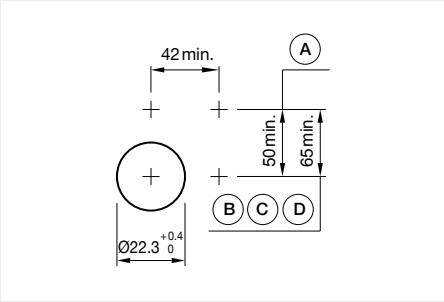

Mounting cut-outs [mm]
A = Screw terminal
B = Push-in terminal (PIT)
C = Plug-in terminal 6.3 mm x 0.8 mm
D = Double plug-in terminal 6.3 mm x 0.8 mm

Equipment consisting of (schematic overview)

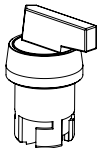

Actuator

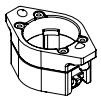

Bayonet flange

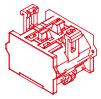

Switching element Page 167

Each Part Number listed below includes all the black components shown in the 3D-drawing.

To obtain a complete unit, please select the red components from the pages shown.

Actuator, Front dimension Ø 29 mm

Switching action	Front bezel colour	Front bezel material	Switching angle	Front bezel surface	Part No.	Wiring diagram
Rest - Maintained	Grey	Plastic	90° right		704.100.0.12	87
	Nature	Aluminium	90° right	anodised	704.101.0.12	87

Wiring diagrams

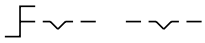

Wiring diagram 87

Selector switch illuminated, 3 positions, short lever, square, IP65

Equipment consisting of (schematic overview)

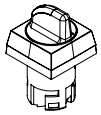

Actuator

Bayonet flange

LED Page 158

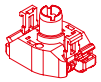

Lamp block Page 164

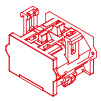

Switching element Page 167

Each Part Number listed below includes all the black components shown in the 3D-drawing.

To obtain a complete unit, please select the red components from the pages shown.

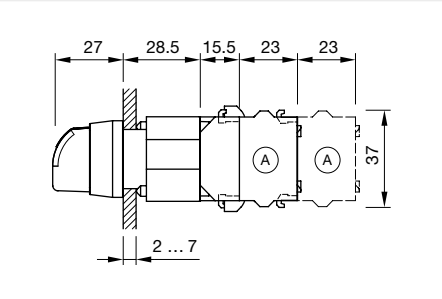

Dimensions [mm]
A = Screw terminal

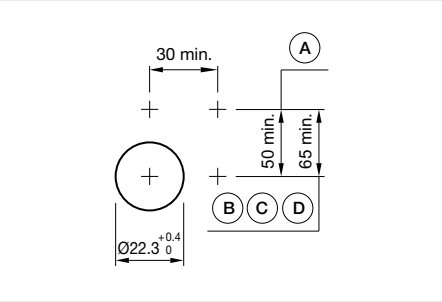

Mounting cut-outs [mm]
A = Screw terminal
B = Push-in terminal (PIT)
C = Plug-in terminal 6.3 mm x 0.8 mm
D = Double plug-in terminal 6.3 mm x 0.8 mm

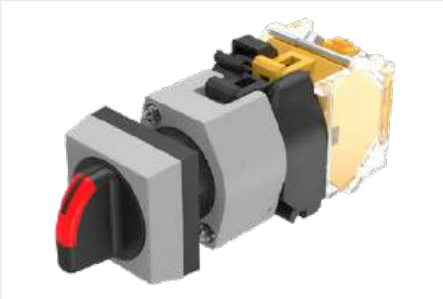

Product can differ from the current configuration.

General information

- Max. 3 switching elements can be clipped on

Actuator, Front dimension 30 mm x 30 mm

Switching action	Front bezel colour	Front bezel material	Switching angle	Part No.	Wiring diagram
Momentary - Rest - Momentary	Grey	Plastic	42° left / 42° right	704.504.0I	90

Wiring diagrams

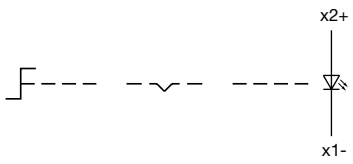

Wiring diagram 90

04 Raised design

Selector switch illuminated, 3 positions, short lever, round, IP65

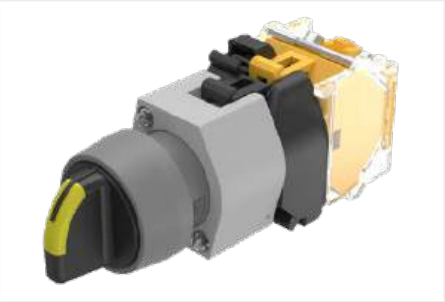

Product can differ from the current configuration.

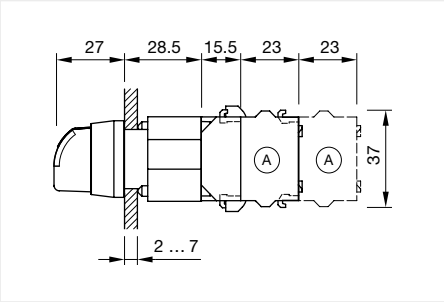

Dimensions [mm]
A = Screw terminal

General information

- Max. 3 switching elements can be clipped on
- The colour of anodised aluminium parts can vary due to technical production reasons

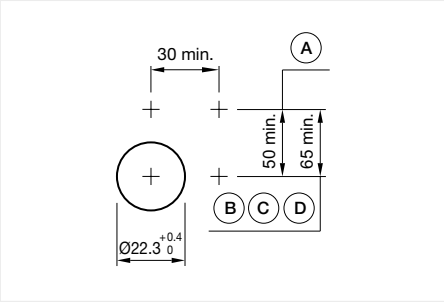

Mounting cut-outs [mm]
A = Screw terminal
B = Push-in terminal (PIT)
C = Plug-in terminal 6.3 mm x 0.8 mm
D = Double plug-in terminal 6.3 mm x 0.8 mm

Equipment consisting of (schematic overview)

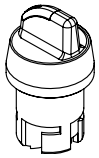

Actuator

Bayonet flange

LED — Page 158

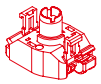

Lamp block — Page 164

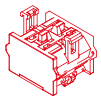

Switching element — Page 167

Each Part Number listed below includes all the black components shown in the 3D-drawing.

To obtain a complete unit, please select the red components from the pages shown.

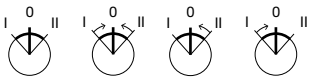

Actuator, Front dimension Ø 29 mm

Switching action	Front bezel colour	Front bezel material	Switching angle	Front bezel surface	Part No.	Wiring diagram
Maintained - Rest - Maintained	Grey	Plastic	42° left / 42° right		704.402.0I	91
	Nature	Aluminium	42° left / 42° right	anodised	704.403.0I	91
Momentary - Rest - Momentary	Grey	Plastic	42° left / 42° right		704.404.0I	90
	Nature	Aluminium	42° left / 42° right	anodised	704.405.0I	90
Maintained - Rest - Momentary	Nature	Aluminium	42° left / 42° right	anodised	704.407.0I	89
Momentary - Rest - Maintained	Nature	Aluminium	42° left / 42° right	anodised	704.409.0I	88

Wiring diagrams

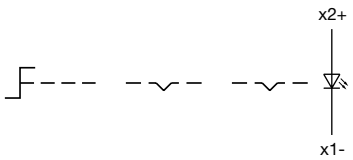

Wiring diagram 88

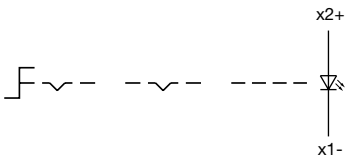

Wiring diagram 89

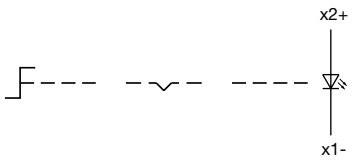

Wiring diagram 90

Wiring diagrams

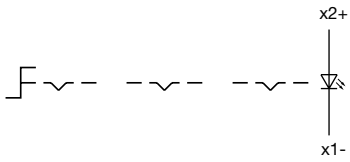

Wiring diagram 91

04 Raised design

Selector switch 3 positions, short lever, square, IP65

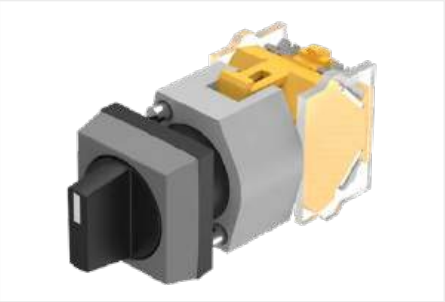

Product can differ from the current configuration.

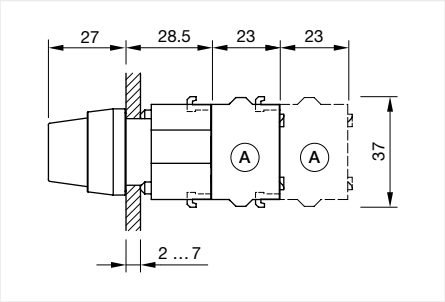

Dimensions [mm]
A = Screw terminal

General information

- Max. 3 switching elements can be clipped on

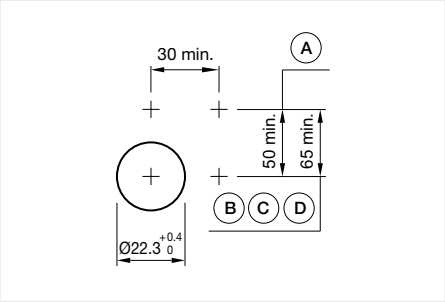

Mounting cut-outs [mm]
A = Screw terminal
B = Push-in terminal (PIT)
C = Plug-in terminal 6.3 mm x 0.8 mm
D = Double plug-in terminal 6.3 mm x 0.8 mm

Equipment consisting of (schematic overview)

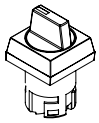

Actuator

Bayonet flange

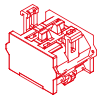

Switching element Page 167

Each Part Number listed below includes all the black components shown in the 3D-drawing.

To obtain a complete unit, please select the red components from the pages shown.

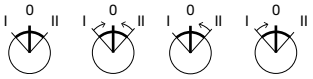

Actuator, Front dimension 30 mm x 30 mm

Switching action	Front bezel colour	Front bezel material	Switching angle	Part No.	Wiring diagram
Maintained - Rest - Maintained	Grey	Plastic	42° left / 42° right	704.502.0	95
Momentary - Rest - Momentary	Grey	Plastic	42° left / 42° right	704.504.0	94
Maintained - Rest - Momentary	Grey	Plastic	42° left / 42° right	704.506.0	93
Momentary - Rest - Maintained	Grey	Plastic	42° left / 42° right	704.508.0	92

Wiring diagrams

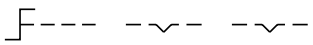

Wiring diagram 92

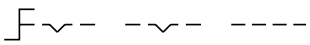

Wiring diagram 93

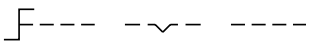

Wiring diagram 94

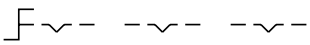

Wiring diagram 95

Selector switch 3 positions, short lever, round, IP65

Equipment consisting of (schematic overview)

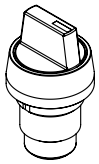

Actuator

Bayonet flange

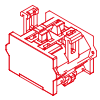

Switching element Page 167

Each Part Number listed below includes all the black components shown in the 3D-drawing.

To obtain a complete unit, please select the red components from the pages shown.

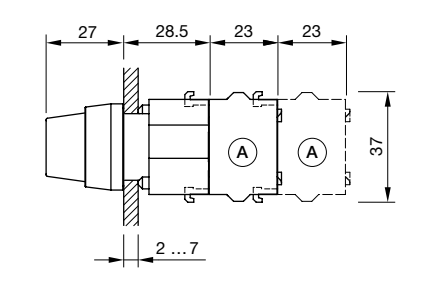

Dimensions [mm]
A = Screw terminal

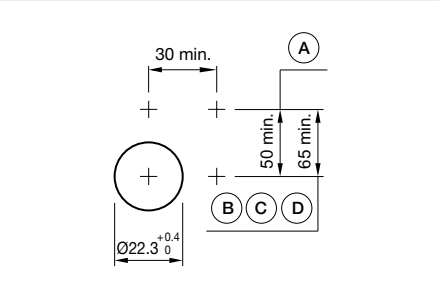

Mounting cut-outs [mm]
A = Screw terminal
B = Push-in terminal (PIT)
C = Plug-in terminal 6.3 mm x 0.8 mm
D = Double plug-in terminal 6.3 mm x 0.8 mm

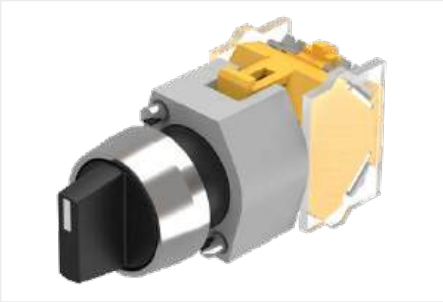

Product can differ from the current configuration.

General information

- Max. 3 switching elements can be clipped on
- The colour of anodised aluminium parts can vary due to technical production reasons

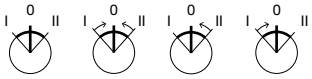

Actuator, Front dimension Ø 29 mm

Switching action	Front bezel colour	Front bezel material	Switching angle	Front bezel surface	Part No.	Wiring diagram
Maintained - Rest - Maintained	Grey	Plastic	42° left / 42° right		704.402.0	95
	Nature	Aluminium	42° left / 42° right	anodised	704.403.0	95
Momentary - Rest - Momentary	Grey	Plastic	42° left / 42° right		704.404.0	94
	Nature	Aluminium	42° left / 42° right	anodised	704.405.0	94
Maintained - Rest - Momentary	Grey	Plastic	42° left / 42° right		704.406.0	93
	Nature	Aluminium	42° left / 42° right	anodised	704.407.0	93
Momentary - Rest - Maintained	Grey	Plastic	42° left / 42° right		704.408.0	92
	Nature	Aluminium	42° left / 42° right	anodised	704.409.0	92

Wiring diagrams

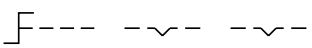

Wiring diagram 92

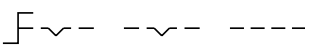

Wiring diagram 93

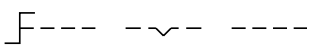

Wiring diagram 94

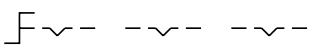

Wiring diagram 95

04 Raised design

Selector switch illuminated, 3 positions, long lever, square, IP65

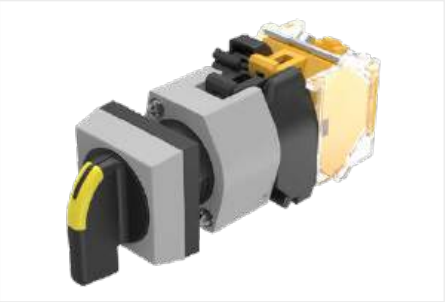

Product can differ from the current configuration.

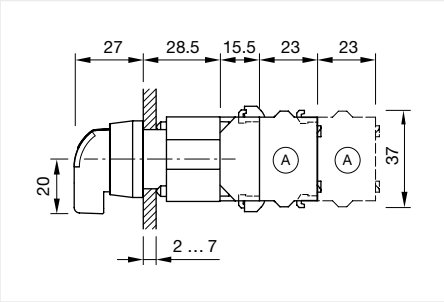

Dimensions [mm]
A = Screw terminal

General information

- Max. 3 switching elements can be clipped on

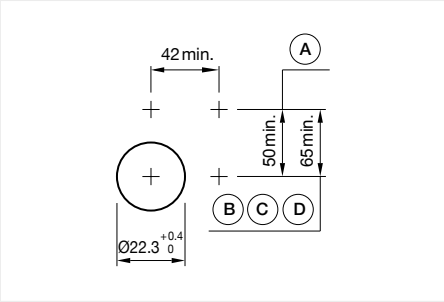

Mounting cut-outs [mm]
A = Screw terminal
B = Push-in terminal (PIT)
C = Plug-in terminal 6.3 mm x 0.8 mm
D = Double plug-in terminal 6.3 mm x 0.8 mm

Equipment consisting of (schematic overview)

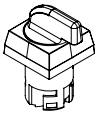

Actuator

Bayonet flange

LED — Page 158

Lamp block — Page 164

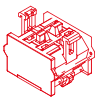

Switching element — Page 167

Each Part Number listed below includes all the black components shown in the 3D-drawing.

To obtain a complete unit, please select the red components from the pages shown.

Actuator, Front dimension 30 mm x 30 mm

Switching action	Front bezel colour	Front bezel material	Switching angle	Part No.	Wiring diagram
Momentary - Rest - Momentary	Grey	Plastic	42° left / 42° right	704.294.0I	90

Wiring diagrams

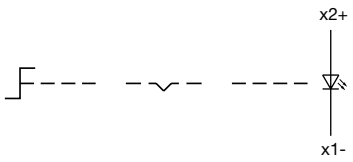

Wiring diagram 90

Selector switch illuminated, 3 positions, long lever, round, IP65

Equipment consisting of (schematic overview)

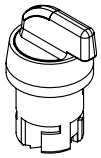

Actuator

Bayonet flange

LED Page 158

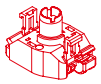

Lamp block Page 164

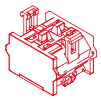

Switching element Page 167

Each Part Number listed below includes all the black components shown in the 3D-drawing.

To obtain a complete unit, please select the red components from the pages shown.

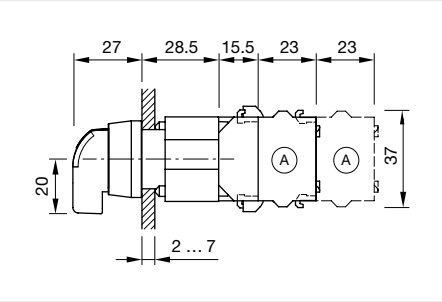

Dimensions [mm]
A = Screw terminal

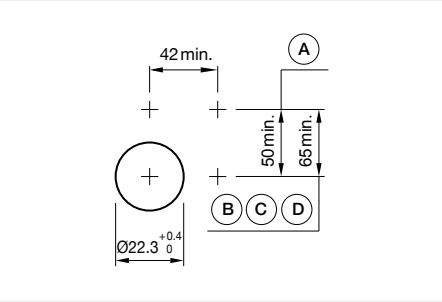

Mounting cut-outs [mm]
A = Screw terminal
B = Push-in terminal (PIT)
C = Plug-in terminal 6.3 mm x 0.8 mm
D = Double plug-in terminal 6.3 mm x 0.8 mm

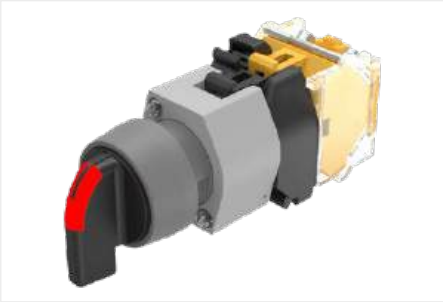

Product can differ from the current configuration.

General information

- Max. 3 switching elements can be clipped on
- The colour of anodised aluminium parts can vary due to technical production reasons

Actuator, Front dimension Ø 29 mm

Switching action	Front bezel colour	Front bezel material	Switching angle	Front bezel surface	Part No.	Wiring diagram
Maintained - Rest - Maintained	Grey	Plastic	42° left / 42° right		704.092.0I	91
Momentary - Rest - Momentary	Grey	Plastic	42° left / 42° right		704.094.0I	90
	Nature	Aluminium	42° left / 42° right	anodised	704.095.0I	90
Maintained - Rest - Momentary	Nature	Aluminium	42° left / 42° right	anodised	704.097.0I	89

Wiring diagrams

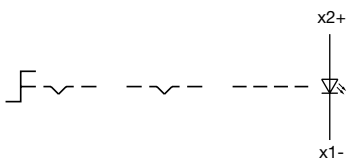

Wiring diagram 89

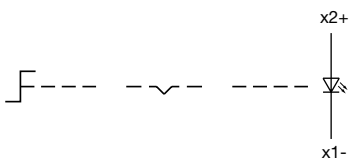

Wiring diagram 90

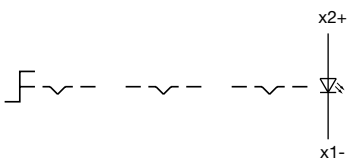

Wiring diagram 91

Selector switch 3 positions, long lever, square, IP65

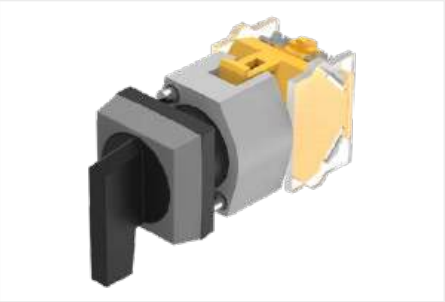

Product can differ from the current configuration.

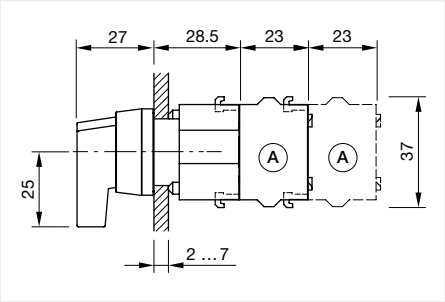

Dimensions [mm]
A = Screw terminal

Equipment consisting of (schematic overview)

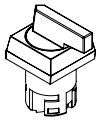

Actuator

Bayonet flange

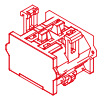

Switching element Page 167

Each Part Number listed below includes all the black components shown in the 3D-drawing.

To obtain a complete unit, please select the red components from the pages shown.

General information

- Max. 3 switching elements can be clipped on

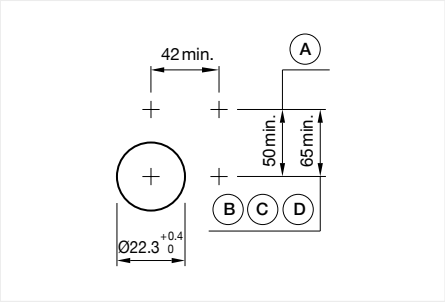

Mounting cut-outs [mm]
A = Screw terminal
B = Push-in terminal (PIT)
C = Plug-in terminal 6.3 mm x 0.8 mm
D = Double plug-in terminal 6.3 mm x 0.8 mm

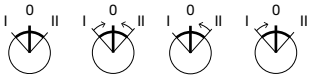

Actuator, Front dimension 30 mm x 30 mm

Switching action	Front bezel colour	Front bezel material	Switching angle	Part No.	Wiring diagram
Maintained - Rest - Maintained	Grey	Plastic	42° left / 42° right	704.292.0	95
Momentary - Rest - Momentary	Grey	Plastic	42° left / 42° right	704.294.0	94
Maintained - Rest - Momentary	Grey	Plastic	42° left / 42° right	704.296.0	93
Momentary - Rest - Maintained	Grey	Plastic	42° left / 42° right	704.298.0	92

Wiring diagrams

Wiring diagram 92

Wiring diagram 93

Wiring diagram 94

Wiring diagram 95

Selector switch 3 positions, long lever, round, IP65

Equipment consisting of (schematic overview)

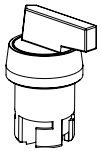

Actuator

Bayonet flange

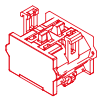

Switching element Page 167

Each Part Number listed below includes all the black components shown in the 3D-drawing.

To obtain a complete unit, please select the red components from the pages shown.

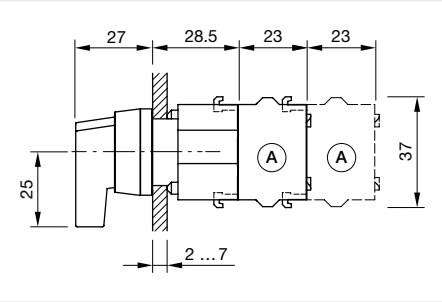

Dimensions [mm]
A = Screw terminal

Product can differ from the current configuration.

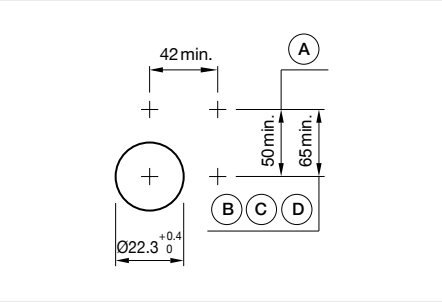

Mounting cut-outs [mm]
A = Screw terminal
B = Push-in terminal (PIT)
C = Plug-in terminal 6.3 mm x 0.8 mm
D = Double plug-in terminal 6.3 mm x 0.8 mm

General information

- Max. 3 switching elements can be clipped on
- The colour of anodised aluminium parts can vary due to technical production reasons

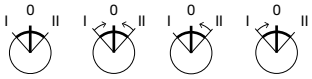

Actuator, Front dimension Ø 29 mm

Switching action	Front bezel colour	Front bezel material	Switching angle	Front bezel surface	Part No.	Wiring diagram
Maintained - Rest - Maintained	Grey	Plastic	42° left / 42° right		704.092.0	95
	Nature	Aluminium	42° left / 42° right	anodised	704.093.0	95
Momentary - Rest - Momentary	Grey	Plastic	42° left / 42° right		704.094.0	94
	Nature	Aluminium	42° left / 42° right	anodised	704.095.0	94
Maintained - Rest - Momentary	Grey	Plastic	42° left / 42° right		704.096.0	93
	Nature	Aluminium	42° left / 42° right	anodised	704.097.0	93
Momentary - Rest - Maintained	Grey	Plastic	42° left / 42° right		704.098.0	92
	Nature	Aluminium	42° left / 42° right	anodised	704.099.0	92

Wiring diagrams

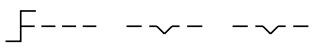

Wiring diagram 92

Wiring diagram 93

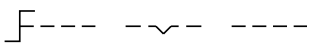

Wiring diagram 94

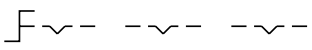

Wiring diagram 95

04 Raised design

Selector rotary switch, short lever, rounded, square, IP65

Product can differ from the current configuration.

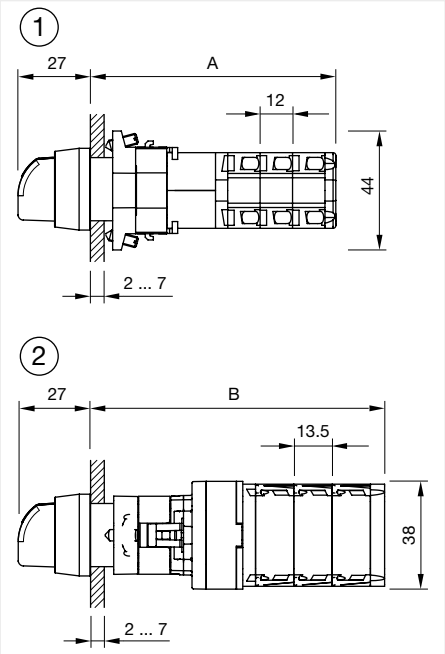

Dimensions [mm]
1 = Kraus & Naimer switching element
A = (Number of stages x 12) + 54.5 mm
2 = Santon switching element
B = (Number of stages x 13.5) + 54.5 mm

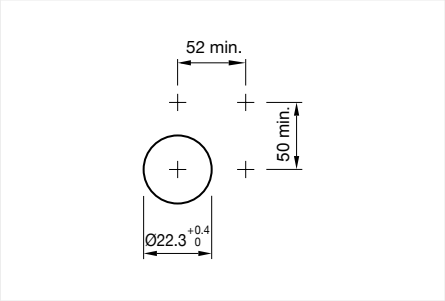

Mounting cut-outs [mm]

Equipment consisting of (schematic overview)

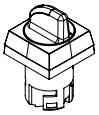

Actuator

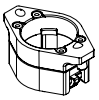

Bayonet flange

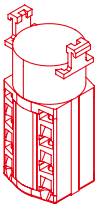

Switching element Page 182

Each Part Number listed below includes all the black components shown in the 3D-drawing.

To obtain a complete unit, please select the red components from the pages shown.

Actuator, Front dimension 30 mm x 30 mm

Front bezel colour	Front bezel material	Switching positions	Part No.
Grey	Plastic	Rest = 9 o'clock	704.510.1KNI

Selector rotary switch, short lever rounded, round, IP65

Equipment consisting of (schematic overview)

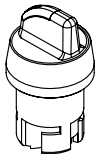

Actuator

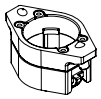

Bayonet flange

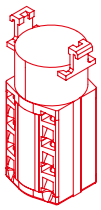

Switching element Page 182

Each Part Number listed below includes all the black components shown in the 3D-drawing.

To obtain a complete unit, please select the red components from the pages shown.

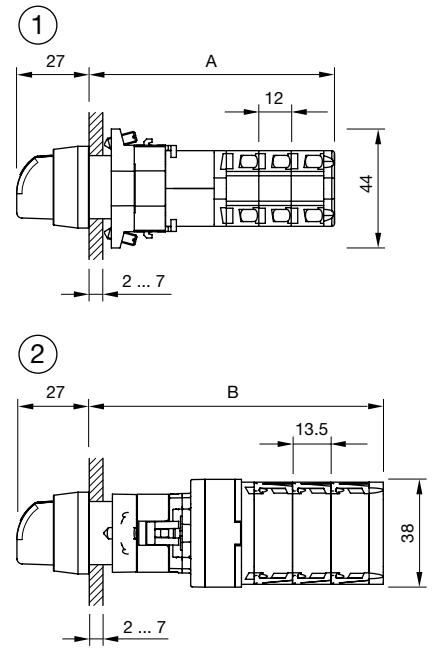

Dimensions [mm]
1 = Kraus & Naimer switching element
A = (Number of stages x 12) + 54.5 mm
2 = Santon switching element
B = (Number of stages x 13.5) + 54.5 mm

Product can differ from the current configuration.

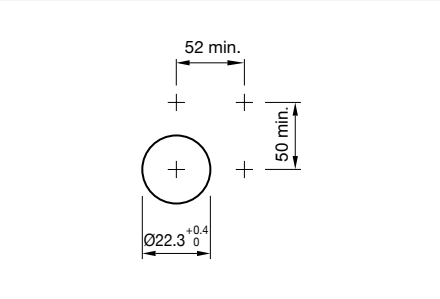

Mounting cut-outs [mm]

General information

- The colour of anodised aluminium parts can vary due to technical production reasons

Actuator, Front dimension Ø 29 mm

Front bezel colour	Front bezel material	Switching positions	Front bezel surface	Part No.
Nature	Aluminium	Rest = 9 o'clock	anodised	704.411.1KNI

04 Raised design

Selector rotary switch, short lever, square, IP65

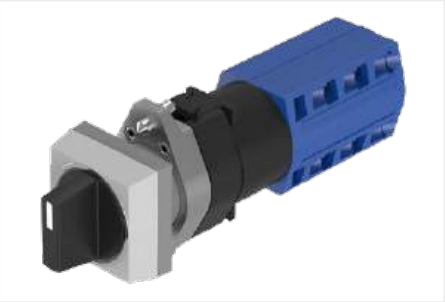

Product can differ from the current configuration.

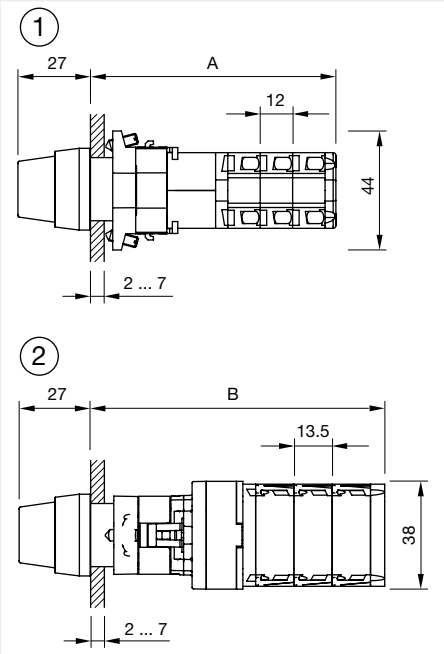

Dimensions [mm]
1 = Kraus & Naimer switching element
A = (Number of stages x 12) + 54.5 mm
2 = Santon switching element
B = (Number of stages x 13.5) + 54.5 mm

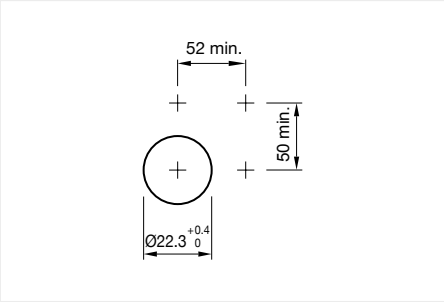

Mounting cut-outs [mm]

Equipment consisting of (schematic overview)

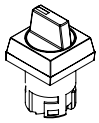

Actuator

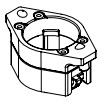

Bayonet flange

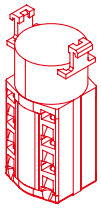

Switching element Page 182

Each Part Number listed below includes all the black components shown in the 3D-drawing.

To obtain a complete unit, please select the red components from the pages shown.

Actuator, Front dimension 30 mm x 30 mm

Front bezel colour	Front bezel material	Switching positions	Part No.
Grey	Plastic	Rest = 9 o'clock	704.510.1KN

Selector rotary switch, short lever, round, IP65

Equipment consisting of (schematic overview)

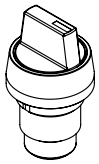

Actuator

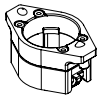

Bayonet flange

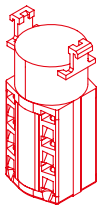

Switching element Page 182

Each Part Number listed below includes all the black components shown in the 3D-drawing.

To obtain a complete unit, please select the red components from the pages shown.

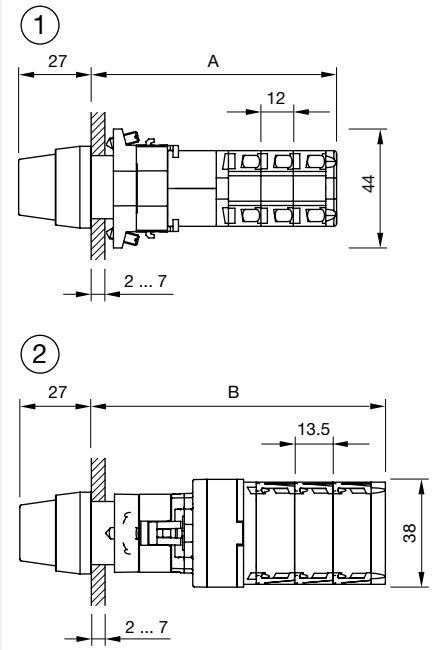

Dimensions [mm]
1 = Kraus & Naimer switching element
A = (Number of stages x 12) + 54.5 mm
2 = Santon switching element
B = (Number of stages x 13.5) + 54.5 mm

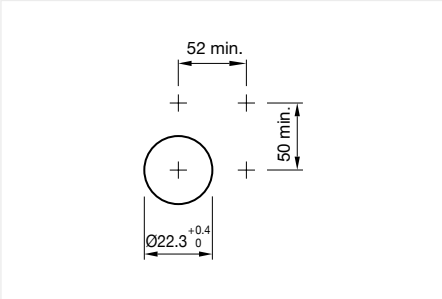

Mounting cut-outs [mm]

Product can differ from the current configuration.

General information

- The colour of anodised aluminium parts can vary due to technical production reasons

Actuator, Front dimension Ø 29 mm

Front bezel colour	Front bezel material	Switching positions	Front bezel surface	Part No.
Nature	Aluminium	Rest = 9 o'clock	anodised	704.411.1KN

04 Raised design

Selector rotary switch, long lever rounded, square, IP65

Product can differ from the current configuration.

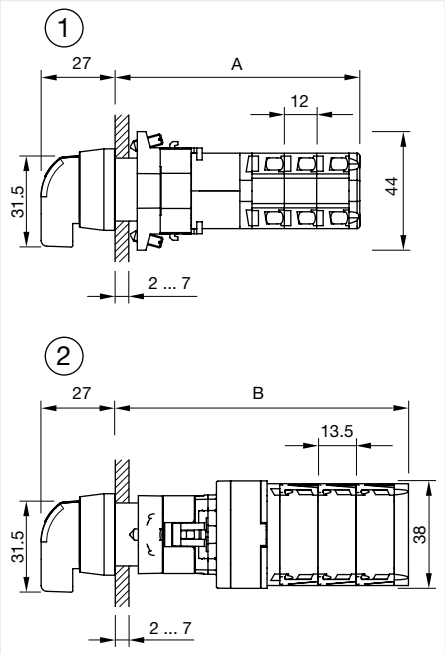

Dimensions [mm]
1 = Kraus & Naimer switching element
A = (Number of stages x 12) + 54.5 mm
2 = Santon switching element
B = (Number of stages x 13.5) + 54.5 mm

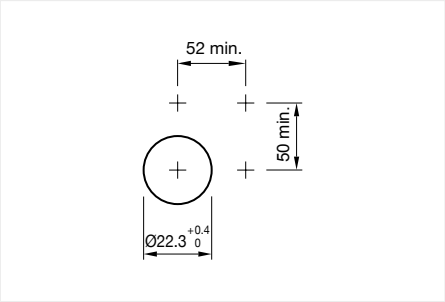

Mounting cut-outs [mm]

Equipment consisting of (schematic overview)

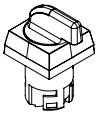

Actuator

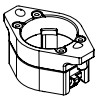

Bayonet flange

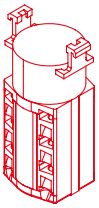

Switching element Page 182

Each Part Number listed below includes all the black components shown in the 3D-drawing.

To obtain a complete unit, please select the red components from the pages shown.

Actuator, Front dimension 30 mm x 30 mm

Front bezel colour	Front bezel material	Switching positions	Part No.
Grey	Plastic	Rest = 9 o'clock	704.300.1KNI

Selector rotary switch, long lever rounded, round, IP65

Equipment consisting of (schematic overview)

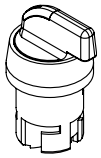

Actuator

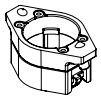

Bayonet flange

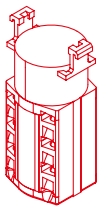

Switching element Page 182

Each Part Number listed below includes all the black components shown in the 3D-drawing.

To obtain a complete unit, please select the red components from the pages shown.

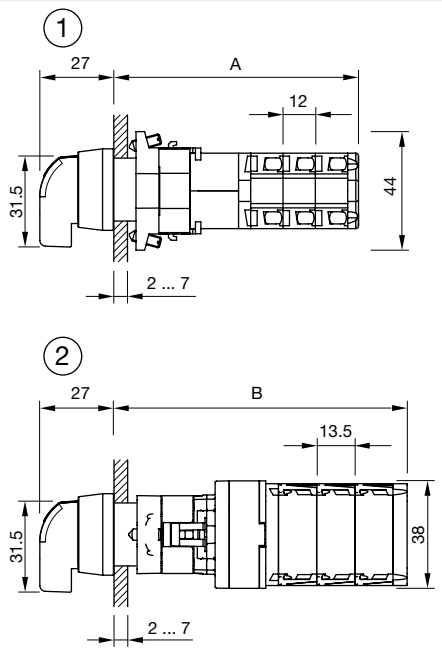

Dimensions [mm]
1 = Kraus & Naimer switching element
A = (Number of stages x 12) + 54.5 mm
2 = Santon switching element
B = (Number of stages x 13.5) + 54.5 mm

Product can differ from the current configuration.

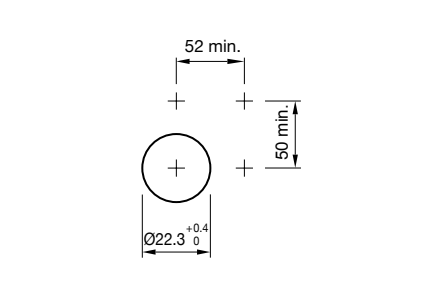

Mounting cut-outs [mm]

General information

- The colour of anodised aluminium parts can vary due to technical production reasons

Actuator, Front dimension Ø 29 mm

Front bezel colour	Front bezel material	Switching positions	Front bezel surface	Part No.
Nature	Aluminium	Rest = 9 o'clock	anodised	704.101.1KNI

Selector rotary switch, long lever, square, IP65

Product can differ from the current configuration.

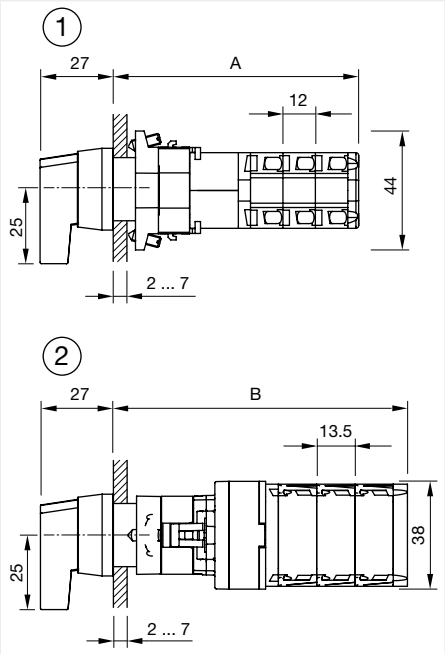

Dimensions [mm]
1 = Kraus & Naimer switching element
A = (Number of stages x 12) + 54.5 mm
2 = Santon switching element
B = (Number of stages x 13.5) + 54.5 mm

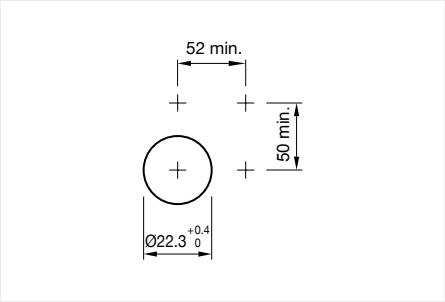

Mounting cut-outs [mm]

Equipment consisting of (schematic overview)

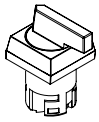

Actuator

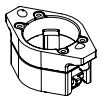

Bayonet flange

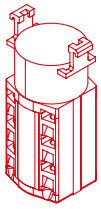

Switching element Page 182

Each Part Number listed below includes all the black components shown in the 3D-drawing.

To obtain a complete unit, please select the red components from the pages shown.

Actuator, Front dimension 30 mm x 30 mm

Front bezel colour	Front bezel material	Switching positions	Part No.
Grey	Plastic	Rest = 9 o'clock	704.300.1KN

Selector rotary switch, long lever, round, IP65

Equipment consisting of (schematic overview)

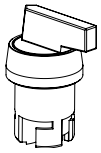

Actuator

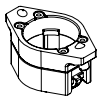

Bayonet flange

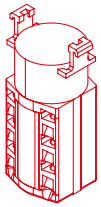

Switching element Page 182

Each Part Number listed below includes all the black components shown in the 3D-drawing.

To obtain a complete unit, please select the red components from the pages shown.

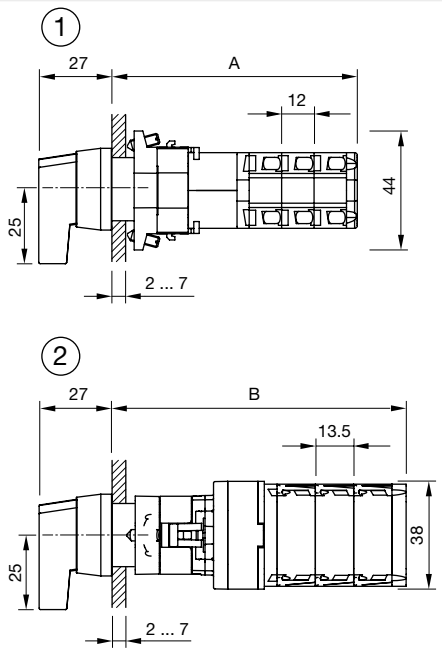

Dimensions [mm]
1 = Kraus & Naimer switching element
A = (Number of stages x 12) + 54.5 mm
2 = Santon switching element
B = (Number of stages x 13.5) + 54.5 mm

Product can differ from the current configuration.

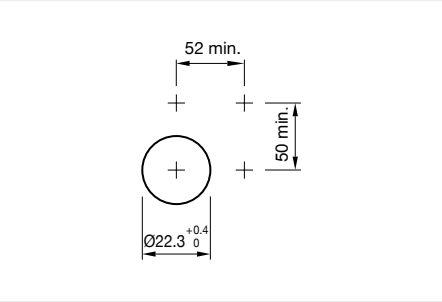

Mounting cut-outs [mm]

General information

- The colour of anodised aluminium parts can vary due to technical production reasons

Actuator, Front dimension Ø 29 mm

Front bezel colour	Front bezel material	Switching positions	Front bezel surface	Part No.
Nature	Aluminium	Rest = 12 o'clock	anodised	704.101.0KN
	Aluminium	Rest = 9 o'clock	anodised	704.101.1KN

Keylock switch 2 positions, square, IP65

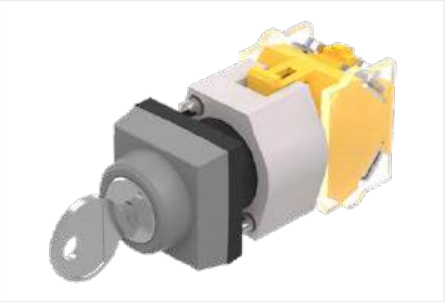

Product can differ from the current configuration.

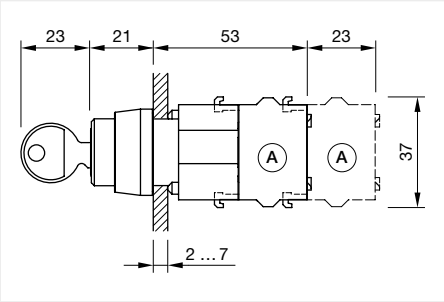

Dimensions [mm]
A = Screw terminal

General information

- Max. 3 switching elements can be clipped on
- The standard lock Ronis 251
- Further lock numbers on request

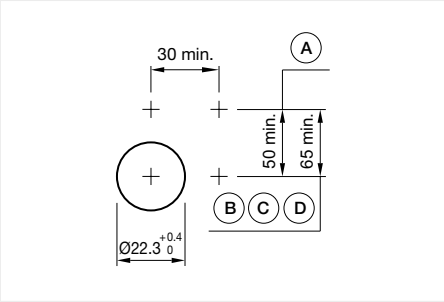

Mounting cut-outs [mm]
A = Screw terminal
B = Push-in terminal (PIT)
C = Plug-in terminal 6.3 mm x 0.8 mm
D = Double plug-in terminal 6.3 mm x 0.8 mm

Equipment consisting of (schematic overview)

Actuator

Bayonet flange

Switching element Page 167

Each Part Number listed below includes all the black components shown in the 3D-drawing.

To obtain a complete unit, please select the red components from the pages shown.

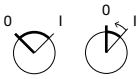

Actuator, Front dimension 30 mm x 30 mm

Switching action	Front bezel colour	Front bezel material	Switching angle	Part No.	Wiring diagram
Rest - Maintained (a)	Grey	Plastic	90° right / -45° … +45°	704.340.0	79
Rest (a) - Maintained	Grey	Plastic	90° right / -45° … +45°	704.341.0	79
Rest (a) - Maintained (a)	Grey	Plastic	90° right / -45° … +45°	704.342.0	79
Rest (a) - Momentary	Grey	Plastic	42° right	704.343.0	78

a = Key remove

Wiring diagrams

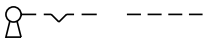

Wiring diagram 78

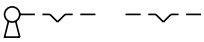

Wiring diagram 79

Keylock switch 2 positions, round, IP65

Equipment consisting of (schematic overview)

Actuator

Bayonet flange

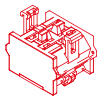

Switching element Page 167

Each Part Number listed below includes all the black components shown in the 3D-drawing.

To obtain a complete unit, please select the red components from the pages shown.

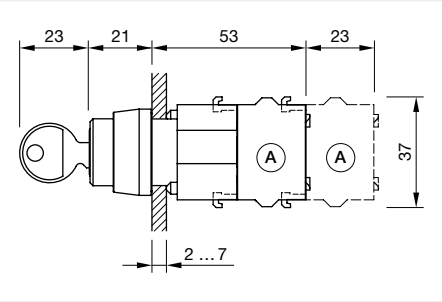

Dimensions [mm]
A = Screw terminal

Product can differ from the current configuration.

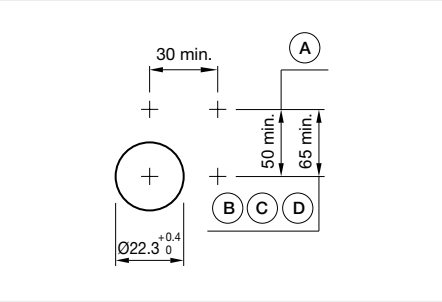

Mounting cut-outs [mm]
A = Screw terminal
B = Push-in terminal (PIT)
C = Plug-in terminal 6.3 mm x 0.8 mm
D = Double plug-in terminal 6.3 mm x 0.8 mm

General information

- Max. 3 switching elements can be clipped on
- The standard lock Ronis 251
- Further lock numbers on request
- The colour of anodised aluminium parts can vary due to technical production reasons

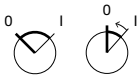

Actuator, Front dimension Ø 29 mm

Switching action	Front bezel colour	Front bezel material	Switching angle	Part No.	Wiring diagram
Rest - Maintained (a)	Nature	Aluminium	90° right / -45° … +45°	704.120.0	79
Rest (a) - Maintained	Nature	Aluminium	90° right / -45° … +45°	704.121.0	79
Rest (a) - Maintained (a)	Nature	Aluminium	90° right / -45° … +45°	704.122.0	79
Rest (a) - Momentary	Nature	Aluminium	42° right	704.123.0	78

a = Key remove

Wiring diagrams

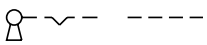

Wiring diagram 78

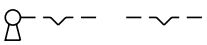

Wiring diagram 79

Keylock switch 3 positions, square, IP65

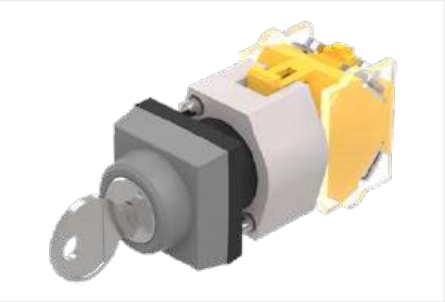

Product can differ from the current configuration.

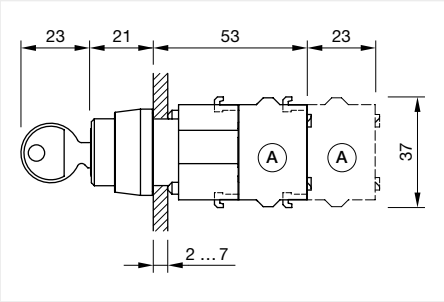

Dimensions [mm]
A = Screw terminal

General information

- Max. 3 switching elements can be clipped on
- The standard lock Ronis 251
- Further lock numbers on request

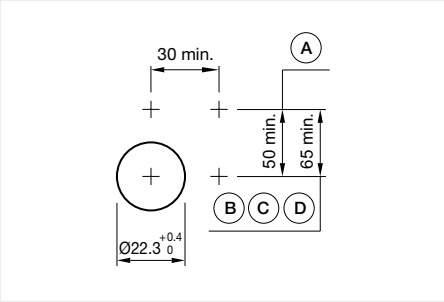

Mounting cut-outs [mm]
A = Screw terminal
B = Push-in terminal (PIT)
C = Plug-in terminal 6.3 mm x 0.8 mm
D = Double plug-in terminal 6.3 mm x 0.8 mm

Equipment consisting of (schematic overview)

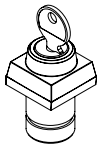

Actuator

Bayonet flange

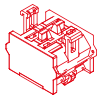

Switching element Page 167

Each Part Number listed below includes all the black components shown in the 3D-drawing.

To obtain a complete unit, please select the red components from the pages shown.

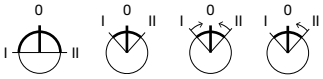

Actuator, Front dimension 30 mm x 30 mm

Switching action	Front bezel colour	Front bezel material	Switching angle	Part No.	Wiring diagram
Maintained (a) - Rest (a) - Maintained (a)	Grey	Plastic	90° left / 90° right	704.333.0	83
Maintained - Rest (a) - Maintained	Grey	Plastic	42° left / 42° right	704.334.0	83
Momentary - Rest (a) - Momentary	Grey	Plastic	42° left / 42° right	704.335.0	82
Maintained (a) - Rest - Momentary	Grey	Plastic	42° left / 42° right	704.337.0	81
Maintained (a) - Rest (a) - Momentary	Grey	Plastic	42° left / 42° right	704.344.0	81

a = Key remove

Wiring diagrams

Wiring diagram 81

Wiring diagram 82

Wiring diagram 83

Keylock switch 3 positions, round, IP65

Equipment consisting of (schematic overview)

Actuator

Bayonet flange

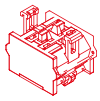

Switching element Page 167

Each Part Number listed below includes all the black components shown in the 3D-drawing.

To obtain a complete unit, please select the red components from the pages shown.

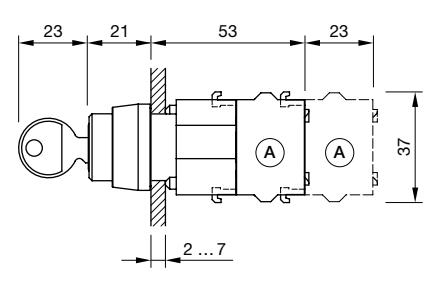

Dimensions [mm]
A = Screw terminal

Product can differ from the current configuration.

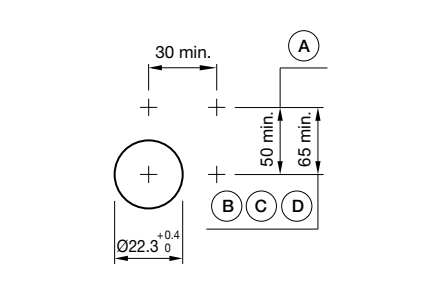

Mounting cut-outs [mm]
A = Screw terminal
B = Push-in terminal (PIT)
C = Plug-in terminal 6.3 mm x 0.8 mm
D = Double plug-in terminal 6.3 mm x 0.8 mm

General information

- Max. 3 switching elements can be clipped on
- The standard lock Ronis 251
- Further lock numbers on request
- The colour of anodised aluminium parts can vary due to technical production reasons

Actuator, Front dimension Ø 29 mm

Switching action	Front bezel colour	Front bezel material	Switching angle	Part No.	Wiring diagram
Maintained (a) - Rest (a) - Maintained (a)	Nature	Aluminium	90° left / 90° right	704.113.0	83
Maintained - Rest (a) - Maintained	Nature	Aluminium	42° left / 42° right	704.114.0	83
Momentary - Rest (a) - Momentary	Nature	Aluminium	42° left / 42° right	704.115.0	82
Maintained (a) - Rest - Maintained (a)	Nature	Aluminium	42° left / 42° right	704.116.0	83
Maintained (a) - Rest - Momentary	Nature	Aluminium	42° left / 42° right	704.117.0	81
Momentary - Rest (a) - Maintained	Nature	Aluminium	42° left / 42° right	704.118.0	80
Maintained (a) - Rest (a) - Momentary	Nature	Aluminium	42° left / 42° right	704.124.0	81

a = Key remove

Wiring diagrams

Wiring diagram 80

Wiring diagram 81

Wiring diagram 82

Wiring diagram 83

Indicator full-face illumination compact, round, IP65

Product can differ from the current configuration.

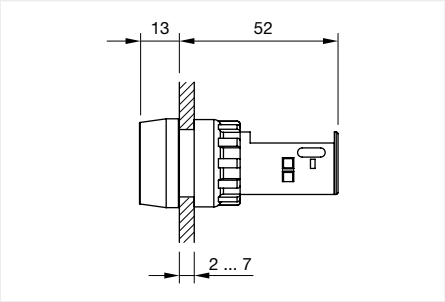

Dimensions [mm]

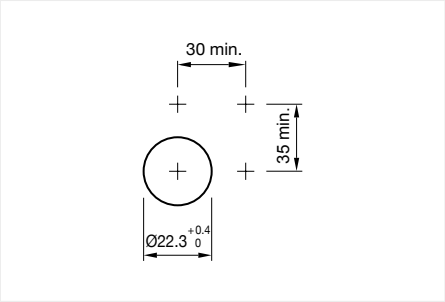

Mounting cut-outs [mm]

Equipment consisting of (schematic overview)

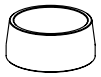

Lens cap

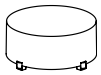

Marking cap

LED Page 158

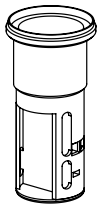

Actuator

Fixing nut

Each Part Number listed below includes all the black components shown in the 3D-drawing.

To obtain a complete unit, please select the red components from the pages shown.

Actuator, Front dimension Ø 29 mm

Product attributes	Housing colour	Housing material	Lens cap colour	Marking cap colour	Part No.	Wiring diagram
Filament lamp max. 2.6 W or LED	Grey	Plastic	Red	White	704.020.2	4
	Grey	Plastic	Yellow	White	704.020.4	4
	Grey	Plastic	Green	White	704.020.5	4
	Grey	Plastic	Blue	White	704.020.6	4
	Grey	Plastic	Colourless	White	704.020.7	4
	Grey	Plastic	Red	Colourless	704.021.2	4
	Grey	Plastic	Yellow	Colourless	704.021.4	4
	Grey	Plastic	Green	Colourless	704.021.5	4
	Grey	Plastic	Blue	Colourless	704.021.6	4
	Grey	Plastic	Colourless	Colourless	704.021.7	4
Filament lamp 130 V, max. 2.6 W with integrated series resistor 230/130 V	Grey	Plastic	Red	White	704.022.2	105
	Grey	Plastic	Yellow	White	704.022.4	105
	Grey	Plastic	Green	White	704.022.5	105

Wiring diagrams

Wiring diagram 4	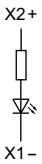 Wiring diagram 105

04 Raised design

Indicator full-face illumination compact, round, IP65

Product can differ from the current configuration.

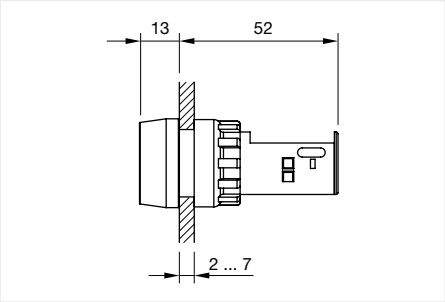

Dimensions [mm]

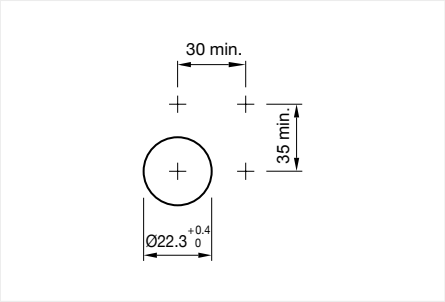

Mounting cut-outs [mm]

Equipment consisting of (schematic overview)

Lens cap — Page 154

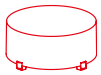

Marking cap — Page 155

LED — Page 158

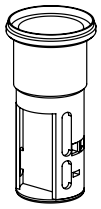

Actuator

Fixing nut

Each Part Number listed below includes all the black components shown in the 3D-drawing.

To obtain a complete unit, please select the red components from the pages shown.

Actuator, Front dimension Ø 29 mm

Product attributes	Housing colour	Housing material	Part No.	Wiring diagram
Without built-in series resistor	Grey	Plastic	704.642.0	4
With series resistor for 220/240 V and filament lamp 130 V, 20 mA	Grey	Plastic	704.642.1	105
With series resistor for 110/125 V and filament lamp 60 V, 33 mA	Grey	Plastic	704.642.2	105

Wiring diagrams

Wiring diagram 4

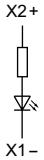

Wiring diagram 105

Indicator full-face illumination, square, IP65

Equipment consisting of (schematic overview)

Lens cap

Diffusor cap

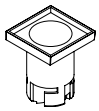
Actuator

Bayonet flange

LED Page 158

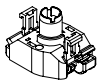
Lamp block

Each Part Number listed below includes all the black components shown in the 3D-drawing.

To obtain a complete unit, please select the red components from the pages shown.

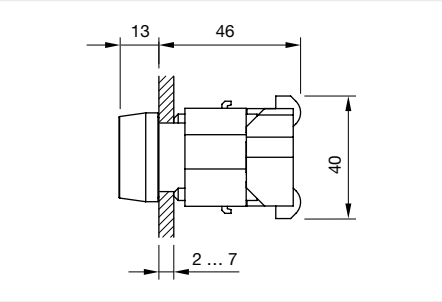

Dimensions [mm]

Product can differ from the current configuration.

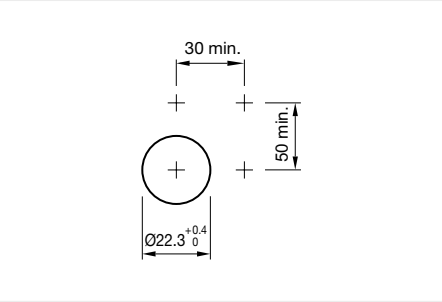

Mounting cut-outs [mm]

Actuator, Front dimension 30 mm x 30 mm

Housing colour	Housing material	Front bezel colour	Lens cap colour	Marking cap colour	Diffusor cap colour	Part No.	Wiring diagram
Grey	Plastic	Black	Red	White	White	704.199.2	4
	Plastic	Black	Yellow	White	White	704.199.4	4
	Plastic	Black	Green	White	White	704.199.5	4
	Plastic	Grey	Red	White	White	704.200.2	4
	Plastic	Grey	Yellow	White	White	704.200.4	4
	Plastic	Grey	Green	White	White	704.200.5	4
	Plastic	Grey	Blue	White	White	704.200.6	4
	Plastic	Grey	Colourless	White	White	704.200.7	4

Wiring diagrams

Wiring diagram 4

Indicator full-face illumination, round, IP65

Product can differ from the current configuration.

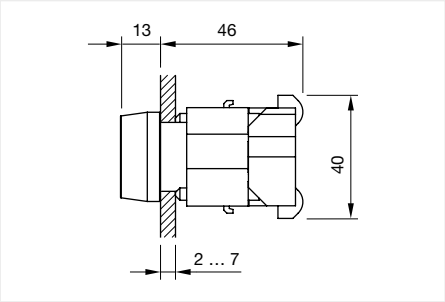

Dimensions [mm]

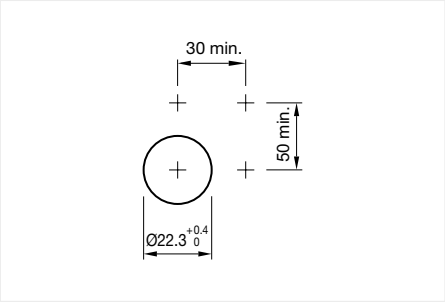

Mounting cut-outs [mm]

Equipment consisting of (schematic overview)

Lens cap

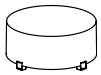

Marking cap

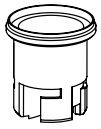

Actuator

Bayonet flange

LED Page 158

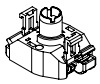

Lamp block

Each Part Number listed below includes all the black components shown in the 3D-drawing.

To obtain a complete unit, please select the red components from the pages shown.

Actuator, Front dimension Ø 29 mm

Housing colour	Housing material	Lens cap colour	Marking cap colour	Diffusor cap colour	Part No.	Wiring diagram
Grey	Plastic	Red	White	White	704.000.2	4
	Plastic	Yellow	White	White	704.000.4	4
	Plastic	Green	White	White	704.000.5	4
	Plastic	Blue	White	White	704.000.6	4
	Plastic	Colourless	White	White	704.000.7	4
	Plastic	Red	Colourless	White	704.001.2	4
	Plastic	Yellow	Colourless	White	704.001.4	4
	Plastic	Green	Colourless	White	704.001.5	4
	Plastic	Blue	Colourless	White	704.001.6	4
	Plastic	Colourless	Colourless	White	704.001.7	4

Wiring diagrams

Wiring diagram 4

Indicator full-face illumination, square, IP65

Product can differ from the current configuration.

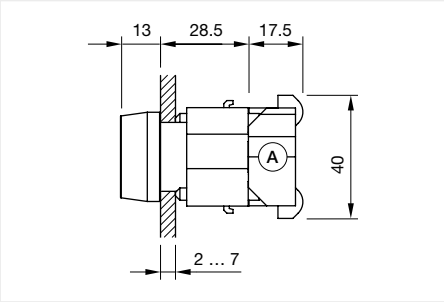

Dimensions [mm]
A = Screw terminal

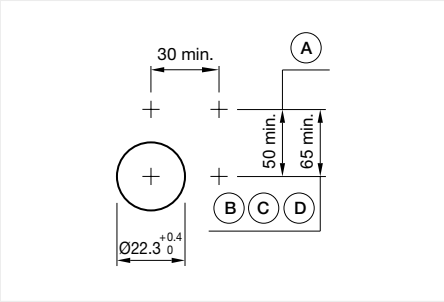

Mounting cut-outs [mm]
A = Screw terminal
B = Push-in terminal (PIT)
C = Plug-in terminal 6.3 mm x 0.8 mm
D = Double plug-in terminal 6.3 mm x 0.8 mm

Equipment consisting of (schematic overview)

Lens cap — Page 154

Diffusor cap — Page 155

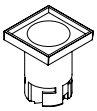

Actuator

Bayonet flange — Page 157

LED — Page 158

Lamp block — Page 164

Each Part Number listed below includes all the black components shown in the 3D-drawing.

To obtain a complete unit, please select the red components from the pages shown.

Actuator, Front dimension 30 mm x 30 mm

Housing colour	Housing material	Part No.	Wiring diagram
Black	Plastic	704.730.0	4
Grey	Plastic	704.730.1	4

Wiring diagrams

Wiring diagram 4

Indicator full-face illumination, round, IP65

Equipment consisting of (schematic overview)

Lens cap — Page 154

Marking cap — Page 155

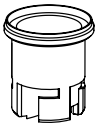
Actuator

Bayonet flange — Page 157

LED — Page 158

Lamp block — Page 164

Each Part Number listed below includes all the black components shown in the 3D-drawing.

To obtain a complete unit, please select the red components from the pages shown.

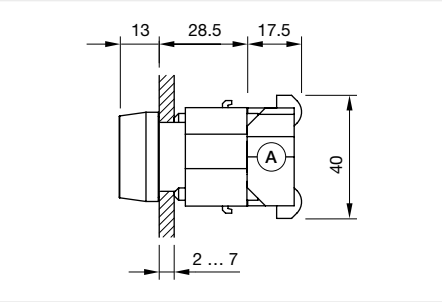

Dimensions [mm]
A = Screw terminal

Product can differ from the current configuration.

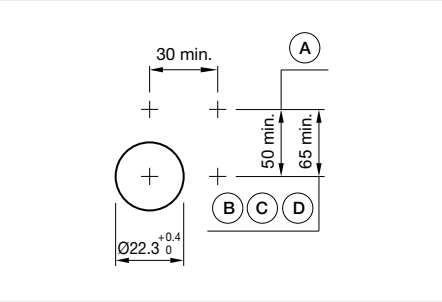

Mounting cut-outs [mm]
A = Screw terminal
B = Push-in terminal (PIT)
C = Plug-in terminal 6.3 mm x 0.8 mm
D = Double plug-in terminal 6.3 mm x 0.8 mm

Actuator, Front dimension Ø 29 mm

Housing colour	Housing material	Part No.	Wiring diagram
Grey	Plastic	704.630.1	4

Wiring diagrams

Wiring diagram 4

Indicator front illumination, square, IP65

Product can differ from the current configuration.

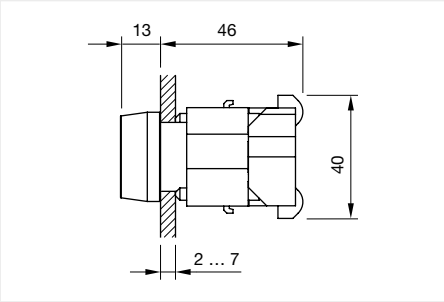

Dimensions [mm]

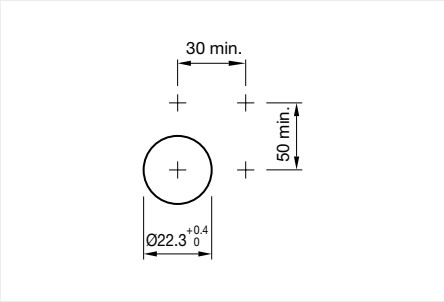

Mounting cut-outs [mm]

Equipment consisting of (schematic overview)

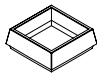

Front bezel

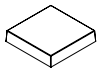

Lens

Lens holder

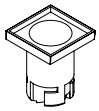

Actuator

Bayonet flange

LED Page 158

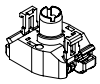

Lamp block

Each Part Number listed below includes all the black components shown in the 3D-drawing.

To obtain a complete unit, please select the red components from the pages shown.

Actuator, Front dimension 30 mm x 30 mm

Housing colour	Housing material	Front bezel colour	Lens colour	Marking plate colour	Marking plate optics	Part No.	Wiring diagram
Black	Plastic	Grey	Red	White	translucent	704.202.2	4
	Plastic	Grey	Yellow	White	translucent	704.202.4	4
	Plastic	Grey	Green	White	translucent	704.202.5	4
	Plastic	Grey	Colourless	White	translucent	704.202.7	4
	Plastic	Grey	Red	Colourless	transparent	704.203.2	4
	Plastic	Grey	Yellow	Colourless	transparent	704.203.4	4
	Plastic	Black	Red	White	translucent	704.206.2	4
	Plastic	Black	Yellow	White	translucent	704.206.4	4
	Plastic	Black	Green	White	translucent	704.206.5	4
	Plastic	Black	Colourless	White	translucent	704.206.7	4

Wiring diagrams

Wiring diagram 4

Indicator front illumination, round, IP65

Product can differ from the current configuration.

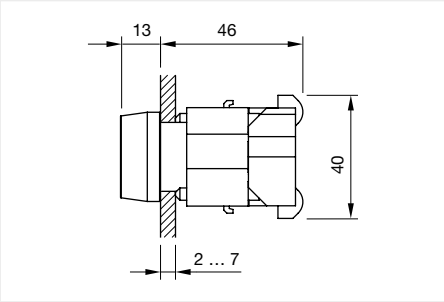

Dimensions [mm]

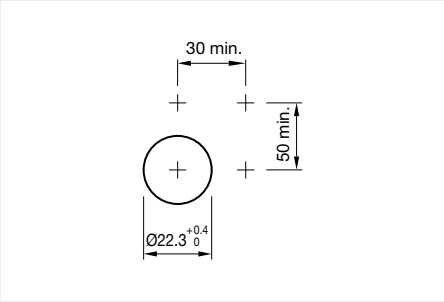

Mounting cut-outs [mm]

Equipment consisting of (schematic overview)

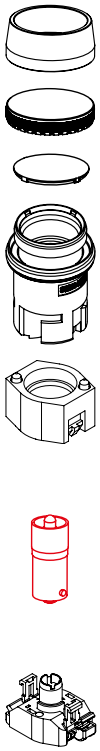

Front bezel

Lens

Marking Plate

Actuator

Bayonet flange

LED Page 158

Lamp block

Each Part Number listed below includes all the black components shown in the 3D-drawing.

To obtain a complete unit, please select the red components from the pages shown.

Front dimension Ø 29 mm

Actuator, Front dimension Ø 29 mm

Housing colour	Housing material	Front bezel colour	Lens colour	Marking plate colour	Marking plate optics	Part No.	Wiring diagram
Grey	Plastic	Grey	Red	White	translucent	704.002.2	4
	Plastic	Grey	Yellow	White	translucent	704.002.4	4
	Plastic	Grey	Green	White	translucent	704.002.5	4
	Plastic	Grey	Blue	White	translucent	704.002.6	4
	Plastic	Grey	Colourless	White	translucent	704.002.7	4
	Plastic	Grey	Red	Colourless	transparent	704.003.2	4
	Plastic	Grey	Yellow	Colourless	transparent	704.003.4	4
	Plastic	Grey	Green	Colourless	transparent	704.003.5	4
	Plastic	Grey	Blue	Colourless	transparent	704.003.6	4
	Plastic	Grey	Colourless	Colourless	transparent	704.003.7	4
	Plastic	Black	Red	White	translucent	704.006.2	4
	Plastic	Black	Yellow	White	translucent	704.006.4	4
	Plastic	Black	Green	White	translucent	704.006.5	4
	Plastic	Black	Blue	White	translucent	704.006.6	4
	Plastic	Black	Colourless	White	translucent	704.006.7	4

Wiring diagrams

Wiring diagram 4

04 Raised design

Indicator front illumination, square, IP65

Product can differ from the current configuration.

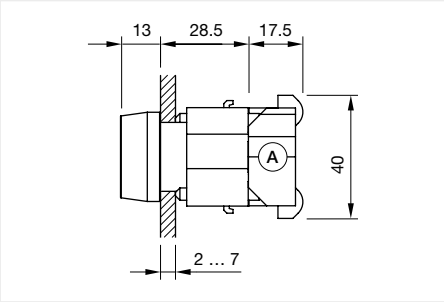

Dimensions [mm]
A = Screw terminal

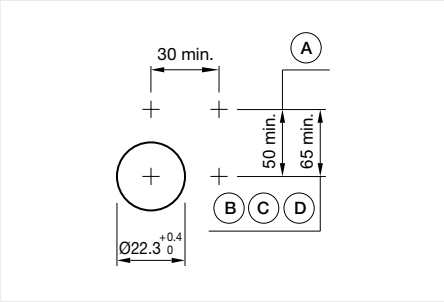

Mounting cut-outs [mm]
A = Screw terminal
B = Push-in terminal (PIT)
C = Plug-in terminal 6.3 mm x 0.8 mm
D = Double plug-in terminal 6.3 mm x 0.8 mm

Equipment consisting of (schematic overview)

Front bezel Page 156

Lens Page 153

Lens holder Page 155

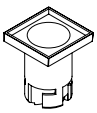
Actuator

Bayonet flange Page 157

LED Page 158

Lamp block Page 164

Each Part Number listed below includes all the black components shown in the 3D-drawing.

To obtain a complete unit, please select the red components from the pages shown.

Actuator, Front dimension 30 mm x 30 mm

Housing colour	Housing material	Part No.	Wiring diagram
Black	Plastic	704.733.0	4
Grey	Plastic	704.733.1	4

Wiring diagrams

Wiring diagram 4

Indicator front illumination, round, IP65

Equipment consisting of (schematic overview)

Front bezel — Page 156

Lens — Page 153

Marking Plate — Page 155

Actuator

Bayonet flange — Page 157

LED — Page 158

Lamp block — Page 164

Each Part Number listed below includes all the black components shown in the 3D-drawing.

To obtain a complete unit, please select the red components from the pages shown.

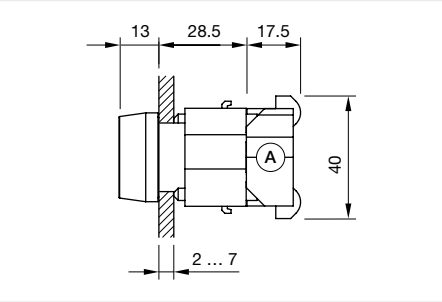

Dimensions [mm]
A = Screw terminal

Product can differ from the current configuration.

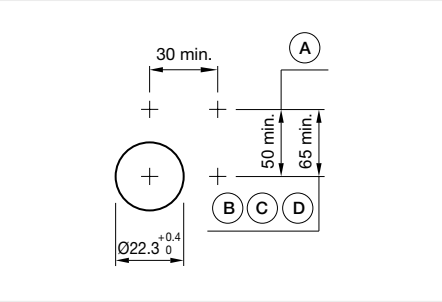

Mounting cut-outs [mm]
A = Screw terminal
B = Push-in terminal (PIT)
C = Plug-in terminal 6.3 mm x 0.8 mm
D = Double plug-in terminal 6.3 mm x 0.8 mm

Actuator, Front dimension Ø 29 mm

Housing colour	Housing material	Part No.	Wiring diagram
Grey	Plastic	704.633.1	4

Wiring diagrams

Wiring diagram 4

Flasher full-face illumination, square, IP65

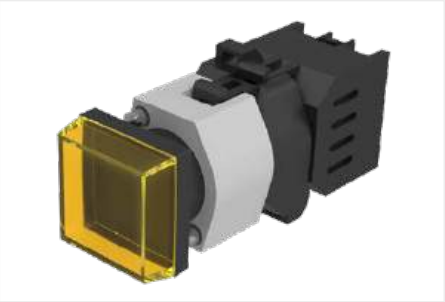

Product can differ from the current configuration.

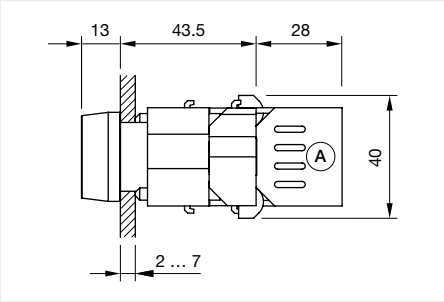

Dimensions [mm]
A = Screw terminal

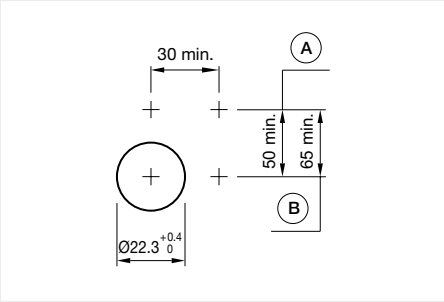

Mounting cut-outs [mm]
A = Screw terminal
B = Push-in terminal (PIT)

General information

- The lamp block will be delivered with screw terminal

Equipment consisting of (schematic overview)

Lens cap

Diffusor cap

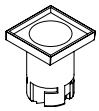

Actuator

Bayonet flange

LED Page 158

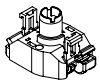

Lamp block

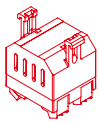

Flasher element Page 185

Each Part Number listed below includes all the black components shown in the 3D-drawing.

To obtain a complete unit, please select the red components from the pages shown.

Actuator, Front dimension 30 mm x 30 mm

Housing colour	Housing material	Front bezel colour	Front bezel material	Diffusor cap colour	Lens cap colour	Marking cap colour	Part No.	Wiring diagram
Grey	Plastic	Black	Plastic	White	Red	White	704.199.2	4
	Plastic	Black	Plastic	White	Yellow	White	704.199.4	4
	Plastic	Black	Plastic	White	Green	White	704.199.5	4
	Plastic	Black	Plastic	White	Colourless	White	704.199.7	4
	Plastic	Grey	Plastic	White	Red	White	704.200.2	4
	Plastic	Grey	Plastic	White	Yellow	White	704.200.4	4
	Plastic	Grey	Plastic	White	Green	White	704.200.5	4
	Plastic	Grey	Plastic	White	Blue	White	704.200.6	4
	Plastic	Grey	Plastic	White	Colourless	White	704.200.7	4

Wiring diagrams

Wiring diagram 4

Flasher full-face illumination, round, IP65

Product can differ from the current configuration.

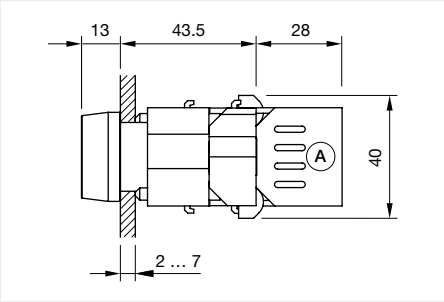

Dimensions [mm]
A = Screw terminal

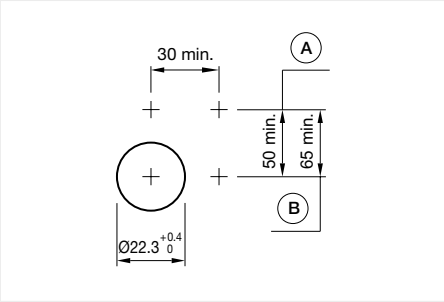

Mounting cut-outs [mm]
A = Screw terminal
B = Push-in terminal (PIT)

General information

- The lamp block will be delivered with screw terminal

Equipment consisting of (schematic overview)

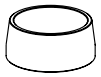
Lens cap

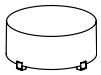
Marking cap

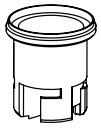
Actuator

Bayonet flange

LED Page 158

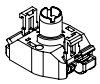
Lamp block

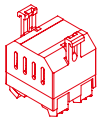
Flasher element Page 185

Each Part Number listed below includes all the black components shown in the 3D-drawing.

To obtain a complete unit, please select the red components from the pages shown.

Actuator, Front dimension Ø 29 mm

Housing colour	Housing material	Diffusor cap colour	Diffusor cap surface	Lens cap colour	Marking cap colour	Marking cap surface	Part No.	Wiring diagram
Grey	Plastic	White		Red	White		704.000.2	4
	Plastic	White		Yellow	White		704.000.4	4
	Plastic	White		Green	White		704.000.5	4
	Plastic	White		Blue	White		704.000.6	4
	Plastic	White		Colourless	White		704.000.7	4
	Plastic	White		Red	Colourless	ribbed	704.001.2	4
	Plastic	White	ribbed	Yellow	Colourless	ribbed	704.001.4	4
	Plastic	White	ribbed	Green	Colourless	ribbed	704.001.5	4
	Plastic	White	ribbed	Blue	Colourless	ribbed	704.001.6	4
	Plastic	White	ribbed	Colourless	Colourless	ribbed	704.001.7	4

Wiring diagrams

Wiring diagram 4

Flasher full-face illumination, square, IP65

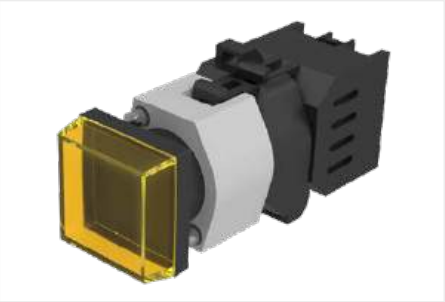

Product can differ from the current configuration.

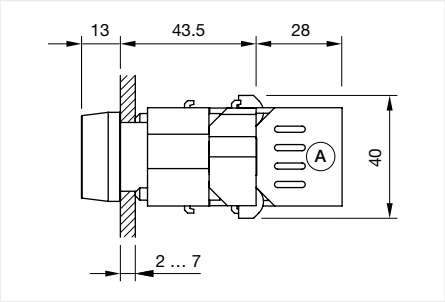

Dimensions [mm]
A = Screw terminal

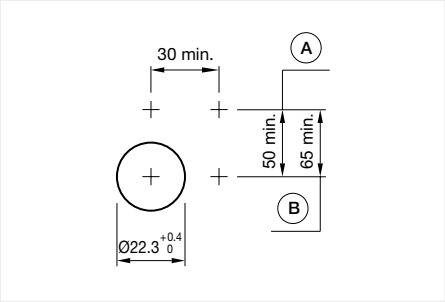

Mounting cut-outs [mm]
A = Screw terminal
B = Push-in terminal (PIT)

Equipment consisting of (schematic overview)

Lens cap — Page 154

Diffusor cap — Page 155

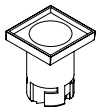

Actuator

Bayonet flange — Page 157

LED — Page 158

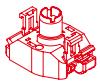

Lamp block — Page 164

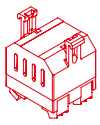

Flasher element — Page 185

Each Part Number listed below includes all the black components shown in the 3D-drawing.

To obtain a complete unit, please select the red components from the pages shown.

Actuator, Front dimension 30 mm x 30 mm

Housing colour	Housing material	Part No.	Wiring diagram
Black	Plastic	704.730.0	4
Grey	Plastic	704.730.1	4

Wiring diagrams

Wiring diagram 4

Flasher full-face illumination, round, IP65

Equipment consisting of (schematic overview)

Lens cap — Page 154

Marking cap — Page 155

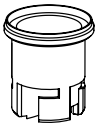
Actuator

Bayonet flange — Page 157

LED — Page 158

Lamp block — Page 164

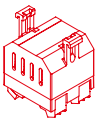
Flasher element — Page 185

Each Part Number listed below includes all the black components shown in the 3D-drawing.

To obtain a complete unit, please select the red components from the pages shown.

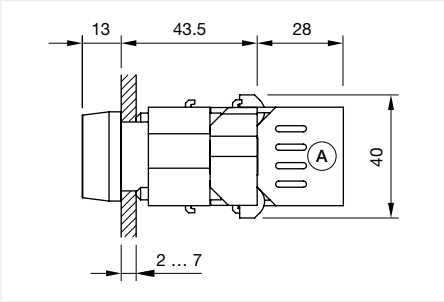

Dimensions [mm]
A = Screw terminal

Product can differ from the current configuration.

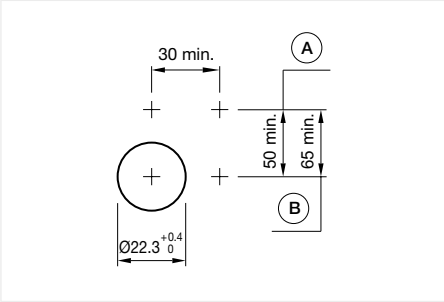

Mounting cut-outs [mm]
A = Screw terminal
B = Push-in terminal (PIT)

Actuator, Front dimension Ø 29 mm

Housing colour	Housing material	Part No.	Wiring diagram
Grey	Plastic	704.630.1	4

Wiring diagrams

Wiring diagram 4

Flasher front illumination,square, IP65

Product can differ from the current configuration.

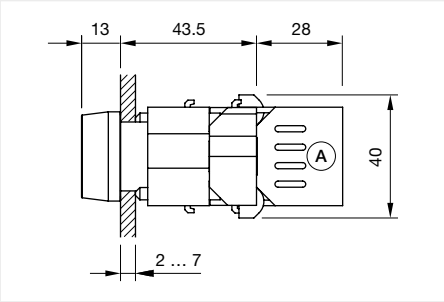

Dimensions [mm]
A = Screw terminal

General information

- The lamp block will be delivered with screw terminal

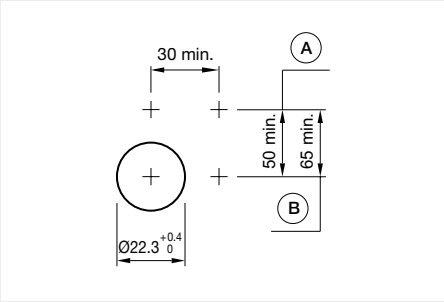

Mounting cut-outs [mm]
A = Screw terminal
B = Push-in terminal (PIT)

Equipment consisting of (schematic overview)

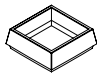
Front bezel

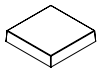
Lens

Lens holder

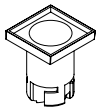
Actuator

Bayonet flange

LED Page 158

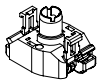
Lamp block

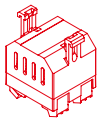
Flasher element Page 185

Each Part Number listed below includes all the black components shown in the 3D-drawing.

To obtain a complete unit, please select the red components from the pages shown.

Actuator, Front dimension 30 mm x 30 mm

Housing colour	Housing material	Lens colour	Front bezel colour	Front bezel material	Marking plate colour	Marking plate optics	Part No.	Wiring diagram
Black	Plastic	Red	Grey	Plastic	White	translucent	704.202.2	4
	Plastic	Yellow	Grey	Plastic	White	translucent	704.202.4	4
	Plastic	Green	Grey	Plastic	White	translucent	704.202.5	4
	Plastic	Blue	Grey	Plastic	White	translucent	704.202.6	4
	Plastic	Colourless	Grey	Plastic	White	translucent	704.202.7	4
	Plastic	Red	Grey	Plastic	Colourless	transparent	704.203.2	4
	Plastic	Yellow	Grey	Plastic	Colourless	transparent	704.203.4	4
	Plastic	Colourless	Grey	Plastic	Colourless	transparent	704.203.7	4
	Plastic	Red	Black	Plastic	White	translucent	704.206.2	4
	Plastic	Yellow	Black	Plastic	White	translucent	704.206.4	4
	Plastic	Green	Black	Plastic	White	translucent	704.206.5	4
	Plastic	Colourless	Black	Plastic	White	translucent	704.206.7	4

Wiring diagrams

Wiring diagram 4

Flasher front illumination, round, IP65

Product can differ from the current configuration.

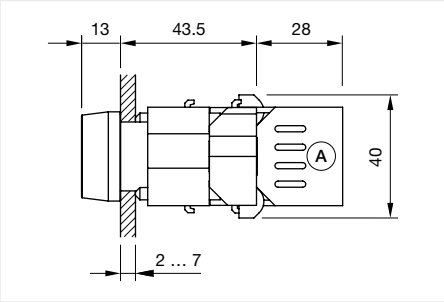

Dimensions [mm]
A = Screw terminal

General information

- The lamp block will be delivered with screw terminal

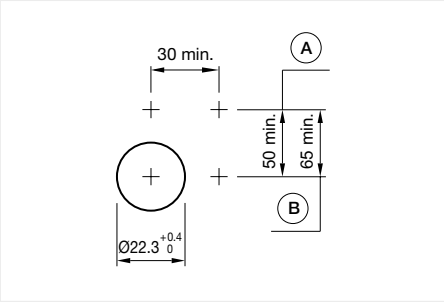

Mounting cut-outs [mm]
A = Screw terminal
B = Push-in terminal (PIT)

Equipment consisting of (schematic overview)

Front bezel

Lens

Marking Plate

Actuator

Bayonet flange

LED Page 158

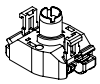

Lamp block

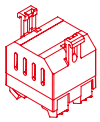

Flasher element Page 185

Each Part Number listed below includes all the black components shown in the 3D-drawing.

To obtain a complete unit, please select the red components from the pages shown.

Actuator, Front dimension Ø 29 mm

Housing colour	Housing material	Lens colour	Front bezel colour	Front bezel material	Marking plate colour	Marking plate optics	Part No.	Wiring diagram
Grey	Plastic	Red	Grey	Plastic	White	translucent	704.002.2	4
	Plastic	Yellow	Grey	Plastic	White	translucent	704.002.4	4
	Plastic	Green	Grey	Plastic	White	translucent	704.002.5	4
	Plastic	Blue	Grey	Plastic	White	translucent	704.002.6	4
	Plastic	Colourless	Grey	Plastic	White	translucent	704.002.7	4
	Plastic	Red	Grey	Plastic	Colourless	transparent	704.003.2	4
	Plastic	Yellow	Grey	Plastic	Colourless	transparent	704.003.4	4
	Plastic	Green	Grey	Plastic	Colourless	transparent	704.003.5	4
	Plastic	Blue	Grey	Plastic	Colourless	transparent	704.003.6	4
	Plastic	Colourless	Grey	Plastic	Colourless	transparent	704.003.7	4
	Plastic	Red	Black	Plastic	White	translucent	704.006.2	4
	Plastic	Yellow	Black	Plastic	White	translucent	704.006.4	4
	Plastic	Green	Black	Plastic	White	translucent	704.006.5	4
	Plastic	Blue	Black	Plastic	White	translucent	704.006.6	4
	Plastic	Colourless	Black	Plastic	White	translucent	704.006.7	4

Wiring diagrams

Wiring diagram 4

Flasher front illumination, square, IP65

Product can differ from the current configuration.

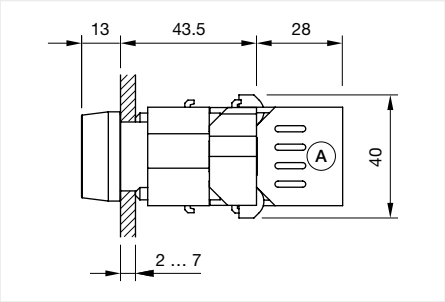

Dimensions [mm]
A = Screw terminal

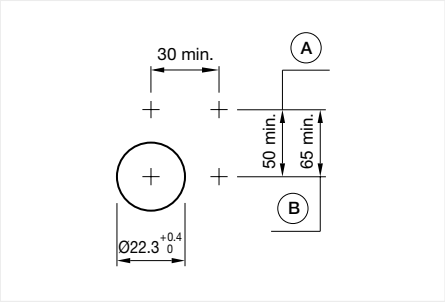

Mounting cut-outs [mm]
A = Screw terminal
B = Push-in terminal (PIT)

Equipment consisting of (schematic overview)

Front bezel Page 156

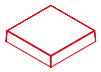
Lens Page 153

Lens holder Page 155

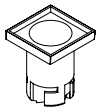
Actuator

Bayonet flange Page 157

LED Page 158

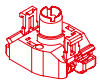
Lamp block Page 164

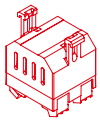
Flasher element Page 185

Each Part Number listed below includes all the black components shown in the 3D-drawing.

To obtain a complete unit, please select the red components from the pages shown.

Actuator, Front dimension 30 mm x 30 mm

Housing colour	Housing material	Part No.	Wiring diagram
Black	Plastic	704.733.0	4
Grey	Plastic	704.733.1	4

Wiring diagrams

Wiring diagram 4

Flasher front illumination, round, IP65

Equipment consisting of (schematic overview)

Front bezel — Page 156

Lens — Page 153

Marking Plate — Page 155

Actuator

Bayonet flange — Page 157

LED — Page 158

Lamp block — Page 164

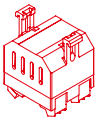
Flasher element — Page 185

Each Part Number listed below includes all the black components shown in the 3D-drawing.

To obtain a complete unit, please select the red components from the pages shown.

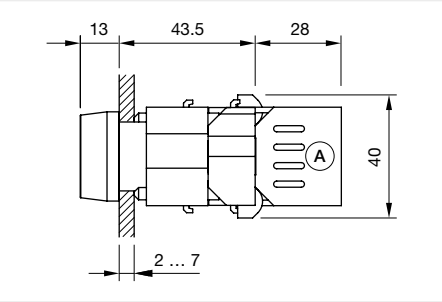

Dimensions [mm]
A = Screw terminal

Product can differ from the current configuration.

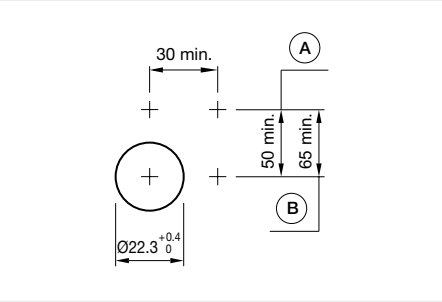

Mounting cut-outs [mm]
A = Screw terminal
B = Push-in terminal (PIT)

Actuator, Front dimension Ø 29 mm

Housing colour	Housing material	Part No.	Wiring diagram
Grey	Plastic	704.633.1	4

Wiring diagrams

Wiring diagram 4

04 Raised design

Buzzer, IP65

Product can differ from the current configuration.

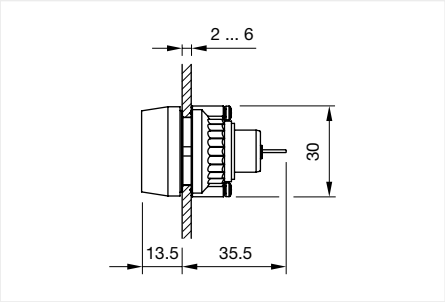

Dimensions [mm]

Equipment consisting of (schematic overview)

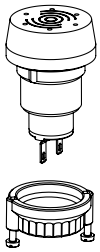

Actuator

Fixing nut

Each Part Number listed below includes all the black components shown in the 3D-drawing.

General information

- Further information see Technical data
- The colour of anodised aluminium parts can vary due to technical production reasons

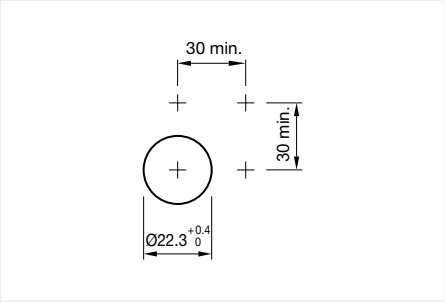

Mounting cut-outs [mm]

Actuator, Front dimension Ø 29 mm

Terminal	Soundpressure	Tone frequency	Operating voltage	Front cap colour	Front cap material	Front cap surface	Part No.	Wiring diagram
Plug-in terminal, 2.8 x 0.5 mm	95 db (A) ±8 dB at a distance of 0.1m	Approx. 3.2 kHz continuous tone only	24 V DC ±10 %	Black	Plastic		14-810.002	71
	95 db (A) ±8 dB at a distance of 0.1m	Approx. 3.2 kHz continuous tone only	24 V DC ±10 %	Nature	Aluminium	anodised	14-810.902	71

Wiring diagrams

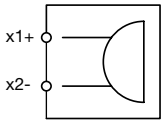

Wiring diagram 71

Potentiometer, IP65

Equipment consisting of (schematic overview)

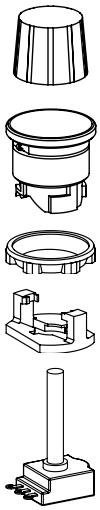

Each Part Number listed below includes all the black components shown in the 3D-drawing.

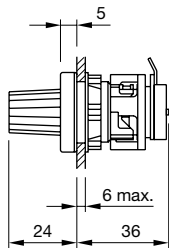

Dimensions [mm]

Product can differ from the current configuration.

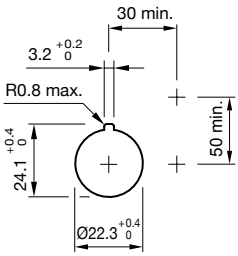

Mounting cut-outs [mm]

General information

- Resistor 10 kOhm / linear, series E3

Actuator, Front dimension Ø 28 mm

Housing material	Front bezel colour	Front bezel material	Front bezel surface	Resistance	Part No.	Wiring diagram
Plastic		Metal	matt chrome	10 kΩ	44-745.20-10K1	104
	Matt grey	Plastic		10 kΩ	44-745.60-10K1	104

Wiring diagrams

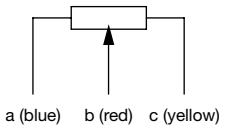

Wiring diagram 104

04 Raised design

Stop switch Ø 37 mm, IP65

Product can differ from the current configuration.

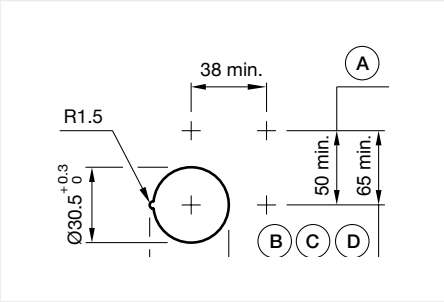

Dimensions [mm]
A = Screw terminal

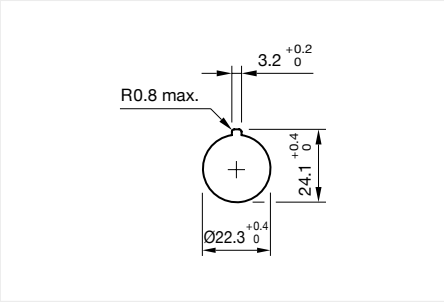

Mounting cut-outs [mm]

General information

- Max. 2 switching elements can be clipped on

Equipment consisting of (schematic overview)

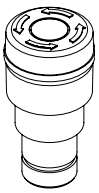

Actuator

Bayonet flange

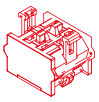

Switching element Page 167

Each Part Number listed below includes all the black components shown in the 3D-drawing.

To obtain a complete unit, please select the red components from the pages shown.

Actuator, Front dimension Ø 37 mm

Switching action	Housing colour	Housing material	Lens colour	Marking	Product attributes	Part No.	Wiring diagram
Maintained	Yellow	Plastic	Red	Arrows	Twist to unlock clockwise	704.064.2	363
	Yellow	Plastic	Red	Arrows	Key to unlock clockwise	704.066.2	364

Wiring diagrams

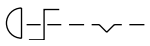

Wiring diagram 363

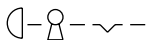

Wiring diagram 364

Stop switch Ø 40 mm, IP65

Equipment consisting of (schematic overview)

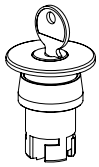

Actuator

Bayonet flange

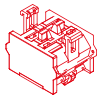

Switching element Page 167

Each Part Number listed below includes all the black components shown in the 3D-drawing.

To obtain a complete unit, please select the red components from the pages shown.

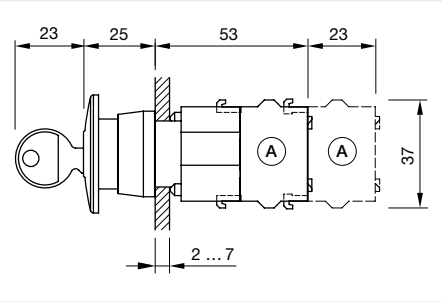

Dimensions [mm]
A = Screw terminal

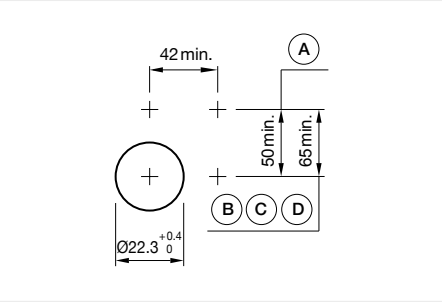

Mounting cut-outs [mm]
A = Screw terminal
B = Push-in terminal (PIT)
C = Plug-in terminal 6.3 mm x 0.8 mm
D = Double plug-in terminal 6.3 mm x 0.8 mm

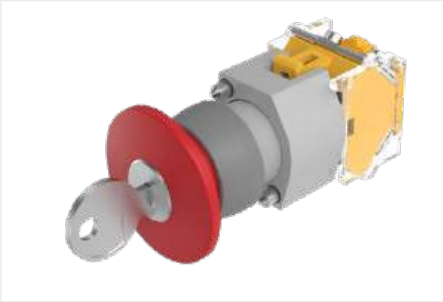

Product can differ from the current configuration.

General information

- The standard lock Ronis 251
- The colour of anodised aluminium parts can vary due to technical production reasons

Actuator, Front dimension Ø 40 mm

Switching action	Housing colour	Housing material	Lens co-lour	Marking	Product attributes	Front bezel colour	Front bezel material	Front bezel surface	Part No.	Wiring diagram
Maintained	Grey	Plastic	Red	Arrows	Twist to unlock clockwise	Grey	Plastic		704.074.2	363
	Grey	Plastic	Red	Stop	Twist to unlock clockwise	Grey	Plastic		704.074.3	363
	Grey	Plastic	Red	Arrows	Twist to unlock clockwise	Nature	Aluminium	anodised	704.075.2	363
	Grey	Plastic	Red	Stop	Twist to unlock clockwise	Nature	Aluminium	anodised	704.075.3	363
	Grey	Plastic	Red		Key to unlock clockwise	Grey	Plastic		704.076.0	364
	Grey	Plastic	Red		Key to unlock clockwise	Nature	Aluminium	anodised	704.078.0	364

Wiring diagrams

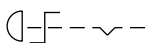

Wiring diagram 363

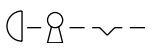

Wiring diagram 364

04 Raised design

Emergency stop switch, IP65

Product can differ from the current configuration.

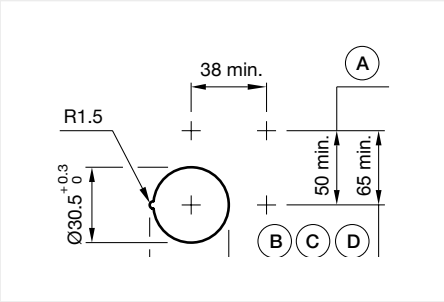

Dimensions [mm]
A = Screw terminal

General information

- Max. 2 switching elements can be clipped on
- Shaft yellow

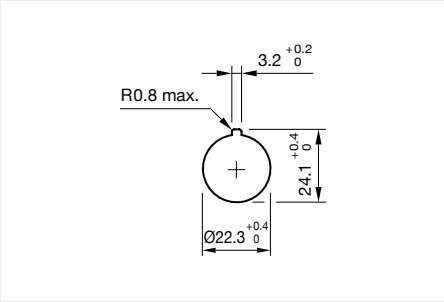

Mounting cut-outs [mm]

Equipment consisting of (schematic overview)

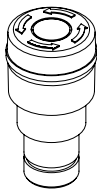

Actuator

Bayonet flange

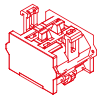

Switching element Page 167

Each Part Number listed below includes all the black components shown in the 3D-drawing.

To obtain a complete unit, please select the red components from the pages shown.

Actuator, Front dimension Ø 37 mm

Switching action	Housing colour	Housing material	Lens colour	Marking	Product attributes	Part No.	Wiring diagram
Maintained	Yellow	Plastic	Red	Arrows	Twist to unlock anti-clockwise	704.064.2A	363
	Yellow	Plastic	Red	Arrows	Key release to unlock anti-clockwise	704.066.2A	364

Wiring diagrams

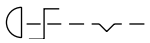

Wiring diagram 363

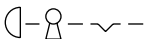

Wiring diagram 364

Lens plastic raised

Lens material	Lens colour	Lens optics	Lens shape	Lens illumination	Dimension	Part No.
Plastic	Red	transparent	flush	illuminative	Ø 23.7 mm	704.611.2
	Yellow	transparent	flush	illuminative	Ø 23.7 mm	704.611.4
	Green	transparent	flush	illuminative	Ø 23.7 mm	704.611.5
	Blue	transparent	flush	illuminative	Ø 23.7 mm	704.611.6
	Colourless	transparent	flush	illuminative	Ø 23.7 mm	704.611.7

Additional information

- To obtain IP67, use marking plate Part Nr. 704.610.X

Lens plastic square

Lens material	Lens colour	Lens optics	Lens shape	Lens illumination	Dimension	Part No.
Plastic	Black	opaque	flush	non illuminative	24.4 mm x 24.4 mm	704.702.0
	White	opaque	flush	non illuminative	24.4 mm x 24.4 mm	704.702.9
	Red	transparent	flush	illuminative	24.4 mm x 24.4 mm	704.702.2
	Yellow	transparent	flush	illuminative	24.4 mm x 24.4 mm	704.702.4
	Green	transparent	flush	illuminative	24.4 mm x 24.4 mm	704.702.5
	Blue	transparent	flush	illuminative	24.4 mm x 24.4 mm	704.702.6
	Colourless	transparent	flush	illuminative	24.4 mm x 24.4 mm	704.702.7

Lens metal round spot round

Lens material	Lens colour	Lens optics	Lens shape	Lens illumination	Dimension	Part No.
Aluminium	Black	opaque	flush	illuminative	Ø 23.7 mm	704.601.01
	Red	opaque	flush	illuminative	Ø 23.7 mm	704.601.21
	Gold	opaque	flush	illuminative	Ø 23.7 mm	704.601.41
	Olive green	opaque	flush	illuminative	Ø 23.7 mm	704.601.51
	Blue	opaque	flush	illuminative	Ø 23.7 mm	704.601.61
	Nature	opaque	flush	illuminative	Ø 23.7 mm	704.601.81
Stainless steel	Nature	opaque	flush	illuminative	Ø 23.7 mm	704.601.91

Additional information

- The colour of anodised aluminium parts can vary due to technical production reasons
- To obtain IP65, it is necessary to use marking plate Part No.. 704.609.X

Lens metal round

Lens material	Lens colour	Lens optics	Lens shape	Lens illumination	Dimension	Part No.
Aluminium	Black	opaque	flush	non illuminative	Ø 23.7 mm	704.601.0
	Red	opaque	flush	non illuminative	Ø 23.7 mm	704.601.2
	Gold	opaque	flush	non illuminative	Ø 23.7 mm	704.601.4
	Olive green	opaque	flush	non illuminative	Ø 23.7 mm	704.601.5
	Blue	opaque	flush	non illuminative	Ø 23.7 mm	704.601.6
	Nature	opaque	flush	non illuminative	Ø 23.7 mm	704.601.8
Stainless steel	Nature	opaque	flush	non illuminative	Ø 23.7 mm	704.601.9
	Nature	opaque	flush	non illuminative	Ø 23.7 mm	704.601.10

Additional information

- The colour of anodised aluminium parts can vary due to technical production reasons
- To obtain IP65, it is necessary to use marking plate Part No.. 704.609.X

Lens plastic round

Lens material	Lens colour	Lens optics	Lens shape	Lens illumination	Symbol	Dimension	Part No.
Plastic	Black	opaque	flush	non illuminative		Ø 23.7 mm	704.602.0
	Red	transparent	flush	illuminative		Ø 23.7 mm	704.602.2
	Yellow	transparent	flush	illuminative		Ø 23.7 mm	704.602.4
	Green	transparent	flush	illuminative		Ø 23.7 mm	704.602.5
	Blue	transparent	flush	illuminative		Ø 23.7 mm	704.602.6
	Colourless	transparent	flush	illuminative		Ø 23.7 mm	704.602.7
	Silver	transparent	flush	illuminative	Ring	Ø 23.7 mm	704.602.7A01

Additional information

- To obtain IP67, use marking plate Part No. 704.609.9
- To obtain IP67 use marking plate Part No. 704.609.9A01 (ring illumination)

Lens cap round for full face indicator

Lens cap material	Lens cap colour	Lens cap optical effect	Diameter	Part No.
Plastic	Red	transparent	29 mm	704.603.2
	Yellow	transparent	29 mm	704.603.4
	Green	transparent	29 mm	704.603.5
	Blue	transparent	29 mm	704.603.6
	Colourless	transparent	29 mm	704.603.7

Additional information

- To obtain IP67, use marking plate Part Nr. 704.608.X

Lens holder

Marking plate material	Marking plate colour	Marking plate illumination	Part No.
Plastic	Colourless	illuminative	704.709.7

Additional information

- For square lens

Marking cap for lens cap round

Marking cap material	Marking cap colour	Marking cap optics	Dimension	Marking cap surface	Part No.
Plastic	Colourless	transparent	Ø 29 mm	ribbed	704.608.7
	White	translucent	Ø 29 mm		704.608.9

Marking cap round raised profile

Marking cap material	Marking cap colour	Marking cap optics	Dimension	Marking cap surface	Part No.
Plastic	Colourless	transparent	Ø 29 mm	ribbed	704.610.7
	White	translucent	Ø 29 mm		704.610.9

Marking cap round flat

Marking plate material	Marking plate colour	Marking plate optics	Marking plate illumination	Dimension	Diameter	Part No.
Plastic	Black	opaque	non illuminative	Ø 20 mm	20 mm	704.609.0
	Colourless	transparent	illuminative	Ø 20 mm	20 mm	704.609.7
	White	translucent	illuminative	Ø 20 mm	20 mm	704.609.9
	White	translucent	ring illumination	Ø 20 mm	20 mm	704.609.9A01

Additional information

- for lens round flat

Diffusor cap

Product attributes	Diffusor cap colour	Diffusor cap optics	Diffusor cap illumination	Part No.
	Colourless	transparent	illuminative	704.708.7
Can be marked	White	translucent	illuminative	704.708.9

Front bezel round, raised design

Front bezel material	Front bezel colour	Front bezel surface	Dimension	Part No.
Plastic	Black		Ø 29 mm	704.600.0
	Grey		Ø 29 mm	704.600.6
	Grey		Ø 29 mm x 16 mm	704.600.7
Aluminium	Nature	anodised	Ø 29 mm	704.600.1
	Black	anodised	Ø 29 mm	704.600.1A
Stainless steel	Nature		Ø 29 mm	704.600.9

Additional information

- The colour of anodised aluminium parts can vary due to technical production reasons

Front bezel square, raised design

Front bezel material	Front bezel colour	Front bezel surface	Dimension	Part No.
Plastic	Black		30 mm x 30 mm	704.701.0
	Chrome coloured	chrome plated	30 mm x 30 mm	704.701.4
	Grey		30 mm x 30 mm	704.701.6

Front bezel set flush design

Front bezel material	Front bezel colour	Front bezel surface	Front bezel type	Dimension	Part No.
Aluminium	Black	anodised	flush	Ø 35 mm	704.955.0
	Nature	anodised	flush	Ø 35 mm	704.955.1
Stainless steel 304	Nature		flush	Ø 35 mm	704.955.9
Stainless steel 316	Nature		flush	Ø 35 mm	704.955.10

Additional information

- The colour of anodised aluminium parts can vary due to technical production reasons

Front bezel set protective membrane

Product attributes	Front bezel material	Front bezel colour	Front bezel surface	Front bezel type	Dimension	Part No.
With transparent silicone membrane	Aluminium	Nature	anodised	With transparent silicone membrane	Ø 35 mm	704.955.3
	Aluminium	Black	anodised	With transparent silicone membrane	Ø 35 mm	704.955.4
With transparent silicone membrane, resistant to sea water	Stainless steel	Nature		With transparent silicone membrane, resistant to sea water	Ø 35 mm	704.955.9E

Additional information

- Front bezel to be mounted with a torque of 0.4 Nm onto actuator
- Before assembling remove the flat gasket of the switch
- The colour of anodised aluminium parts can vary due to technical production reasons

Bayonet flange

Material	Part No.
Plastic	704.950.5
Metal	704.960.5

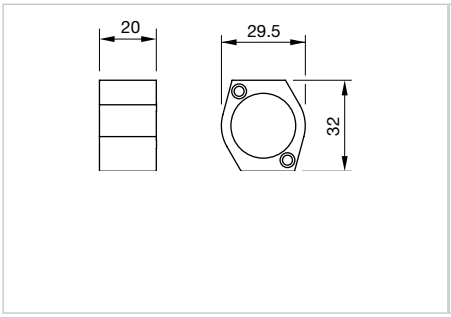

Dimensions [mm]
for Part No. 704.950.5

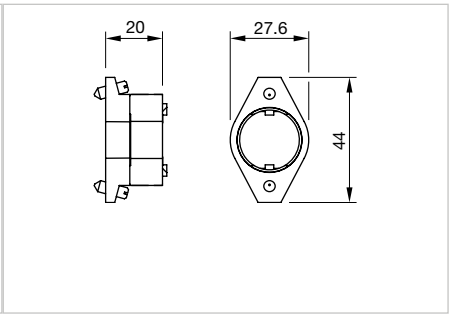

Dimensions [mm]
for Part No. 704.960.5

Single-LED, BA9s

Illumination colour	Operating voltage	Operation current	Lumi. Intensity	Dom. Wavelength	Part No.	Wiring diagram
Red	6 V DC +10%	17 mA ±15 %	400 mcd	630 nm	10-2506.1082	70
	12 V AC/DC +10%	16 mA ±15 %	390 mcd	630 nm	10-2509.1142	70
	24 V AC/DC +10%	15 mA ±15 %	350 mcd	630 nm	10-2512.1142	70
	28 V AC/DC +10%	13 mA ±15 %	300 mcd	630 nm	10-2513.1142	70
	48 V AC/DC +10%	8 mA ±15 %	200 mcd	630 nm	10-2519.1052	70
	130 V DC +10%	3 mA ±15 %	120 mcd	630 nm	10-2524.3042	70
	130 V AC +10%	5 mA ±15 %	180 mcd	630 nm	10-2H24.2052	70
	230 V AC +10%	3 mA ±15 %	120 mcd	630 nm	10-2H25.2042	70
Yellow	6 V DC +10%	17 mA ±15 %	340 mcd	587 nm	10-2506.1084	70
	12 V AC/DC +10%	16 mA ±15 %	340 mcd	587 nm	10-2509.1144	70
	24 V AC/DC +10%	15 mA ±15 %	300 mcd	587 nm	10-2512.1144	70
	28 V AC/DC +10%	13 mA ±15 %	270 mcd	587 nm	10-2513.1144	70
	48 V AC/DC +10%	8 mA ±15 %	180 mcd	587 nm	10-2519.1054	70
	130 V DC +10%	3 mA ±15 %	110 mcd	587 nm	10-2524.3044	70
	130 V AC +10%	5 mA ±15 %	160 mcd	587 nm	10-2H24.2054	70
	230 V AC +10%	3 mA ±15 %	110 mcd	587 nm	10-2H25.2044	70
Green	6 V DC +10%	7 mA ±15 %	1050 mcd	525 nm	10-2506.1085	70
	12 V AC/DC +10%	7 mA ±15 %	1050 mcd	525 nm	10-2509.1145	70
	24 V AC/DC +10%	7 mA ±15 %	1050 mcd	525 nm	10-2512.1145	70
	28 V AC/DC +10%	7 mA ±15 %	1050 mcd	525 nm	10-2513.1145	70
	48 V AC/DC +10%	4 mA ±15 %	600 mcd	525 nm	10-2519.1055	70
	130 V DC +10%	2 mA ±15 %	300 mcd	525 nm	10-2524.3045	70
	130 V AC +10%	3 mA ±15 %	450 mcd	525 nm	10-2H24.2055	70
	230 V AC +10%	2 mA ±15 %	300 mcd	525 nm	10-2H25.2045	70
Blue	6 V DC +10%	17 mA ±15 %	780 mcd	470 nm	10-2506.1086	70
	12 V AC/DC +10%	16 mA ±15 %	720 mcd	470 nm	10-2509.1146	70
	24 V AC/DC +10%	15 mA ±15 %	680 mcd	470 nm	10-2512.1146	70
	28 V AC/DC +10%	13 mA ±15 %	590 mcd	470 nm	10-2513.1146	70
	48 V AC/DC +10%	8 mA ±15 %	400 mcd	470 nm	10-2519.1056	70
	130 V DC +10%	3 mA ±15 %	200 mcd	470 nm	10-2524.3046	70
	130 V AC +10%	5 mA ±15 %	230 mcd	470 nm	10-2H24.2056	70
	230 V AC +10%	3 mA ±15 %	200 mcd	470 nm	10-2H25.2046	70
White	6 V DC +10%	5 mA ±15 %	750 mcd	x: 0,31 / y: 0,32 nm	10-2506.1089	70
	12 V AC/DC +10%	8 mA ±15 %	1200 mcd	x: 0,31 / y: 0,32 nm	10-2509.1149	70
	24 V AC/DC +10%	7 mA ±15 %	1050 mcd	x: 0,31 / y: 0,32 nm	10-2512.1149	70
	28 V AC/DC +10%	5 mA ±15 %	750 mcd	x: 0,31 / y: 0,32 nm	10-2513.1149	70
	48 V AC/DC +10%	5 mA ±15 %	750 mcd	x: 0,31 / y: 0,32 nm	10-2519.1059	70
	130 V DC +10%	1,5 mA ±15 %	225 mcd	x: 0,31 / y: 0,32 nm	10-2524.3049	70
	130 V AC +10%	2 mA ±15 %	300 mcd	x: 0,31 / y: 0,32 nm	10-2H24.2059	70
	230 V AC +10%	1,5 mA ±15 %	225 mcd	x: 0,31 / y: 0,32 nm	10-2H25.2049	70

Additional information

- The specified 6 V DC, 24 V DC Bi-colour; 130 V AC, 130 V DC and 230 V AC versions are built with a protection diode
- The specified 12, 24, 28, 48 VAC/DC versions are built with a bridge rectifier
- The specified 130 VAC types are developed to run on a supply voltage of 130 VAC only
- An operation at a higher supply voltage using commercial lampholders with integrated resistors, is not approved
- If the 24VDC Bi-colour lamp is driven with normal polarity (plus on middle contact of the lamp) the first mentioned colour will light up, with inverted polarity the second colour will ligth up
- The luminous intensity stated is for when used with DC
- Electrical and optical data are measured at 25 °C
- Luminosity and wave length variations caused by LED manufacturing processes may cause slight differences regarding the illumination. The customer has to decide what resistor shall be used to the LED

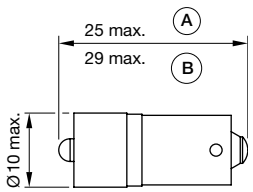

Wiring diagrams

Wiring diagram 70

Single-LED super bright

Illumination colour	Operating voltage	Operation current	Lumi. Intensity	Dom. Wavelength	Part No.	Wiring diagram
Red	28 V AC/DC +10%	14 mA ±15 %	7700 mcd	630 nm	10-2413.1132R	70
Green	28 V AC/DC +10%	13 mA ±15 %	12400 mcd	525 nm	10-2413.1125R	70
Yellow	28 V AC/DC +10%	14 mA ±15 %	4200 mcd	589 nm	10-2413.1134R	70

Additional information

- The specified 12, 24, 28, 48 VAC/DC versions are built with a bridge rectifier
- Electrical and optical data are measured at 25 °C
- Luminosity and wave length variations caused by LED manufacturing processes may cause slight differences regarding the illumination. The customer has to decide what resistor shall be used to the LED

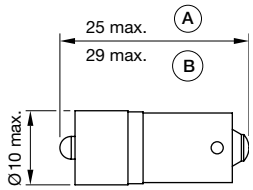

Dimensions [mm]
A = (standard)
B = (super bright)

Wiring diagrams

Wiring diagram 70

Single-LED with integrated Zener diode, BA9s

Illumination colour	Operating voltage	Operation current	Lumi. Intensity	Dom. Wavelength	Part No.	Wiring diagram
Red	24 - 30,00 V DC +10%	13 - 19,00 mA ±15 %	300 - 440 mcd	630 nm	10-2H13.3162Q	469
Green	24 - 30,00 V DC +10%	12 - 18,00 mA ±15 %	1800 - 2700 mcd	525 nm	10-2H13.3165Q	469
Yellow	24 - 30,00 V DC +10%	13 - 19,00 mA ±15 %	270 - 380 mcd	589 nm	10-2H13.3164Q	469
Blue	24 - 30,00 V DC +10%	12 - 18,00 mA ±15 %	560 - 800 mcd	589 nm	10-2H13.3166Q	469
White	24 - 30,00 V DC +10%	7 - 11,00 mA ±15 %	600 - 900 mcd	589 nm	10-2H13.3169Q	469

Additional information

- Luminosity and wave length variations caused by LED manufacturing processes may cause slight differences regarding the illumination. The customer has to decide what resistor shall be used to the LED
- Electrical and optical data are measured at 25 °C
- The specified 12, 24, 28, 48 VAC/DC versions are built with a bridge rectifier

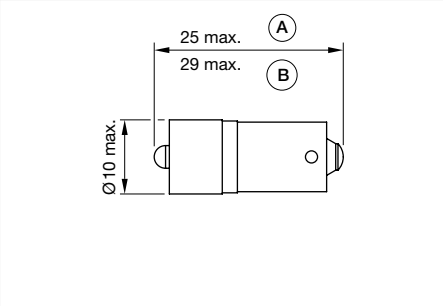

Dimensions [mm]
A = (standard)
B = (super bright)

Wiring diagrams

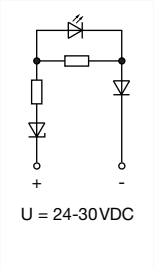

Bi-colour LED, BA9s

Illumination colour	Operating voltage	Operation current	Lumi. Intensity	Dom. Wavelength	Part No.	Wiring diagram
Red / Green	24 V DC +10%	15 mA ±15 %	1200/900 mcd	625/525 nm	10-2H12.314A	171
Red / Yellow	24 V DC +10%	15 mA ±15 %	1200/550 mcd	625/589 nm	10-2H12.314B	171
Green / Yellow	24 V DC +10%	15 mA ±15 %	900/550 mcd	525/589 nm	10-2H12.314C	171

Additional information

- The max. overall length of the lamp may not exeed 25mm
- Electrical and optical data are measured at 25 °C
- The specified 6 V DC, 24 V DC Bi-colour; 130 V AC, 130 V DC and 230 V AC versions are built with a protection diode
- Luminosity and wave length variations caused by LED manufacturing processes may cause slight differences regarding the illumination. The customer has to decide what resistor shall be used to the LED

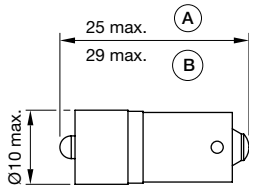

Dimensions [mm]
A = (standard)
B = (super bright)

Wiring diagrams

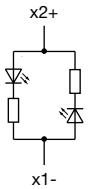

Wiring diagram 171

Multi-LED, BA9s, EN 50155, Fail Safe

Illumination colour	Operating voltage	Operation current	Lumi. Intensity	Dom. Wavelength	Part No.	Wiring diagram
Red	72 V AC/DC	2,2 mA -30%/+25%	4 x 128 mcd	625 nm	10-4H21.1032P	368
	110 V AC/DC	2 mA -30%/+25%	4 x 128 mcd	625 nm	10-4H22.1032P	368
Yellow	72 V AC/DC	2,2 mA -30%/+25%	4 x 112 mcd	589 nm	10-4H21.1034P	368
	110 V AC/DC	2 mA -30%/+25%	4 x 128 mcd	589 nm	10-4H22.1034P	369
Green	72 V AC/DC	2,2 mA -30%/+25%	4 x 478 mcd	525 nm	10-4H21.1035P	368
	110 V AC/DC	2 mA -30%/+25%	4 x 510 mcd	525 nm	10-4H22.1035P	368
Blue	72 V AC/DC	2,2 mA -30%/+25%	4 x 90 mcd	465 nm	10-4H21.1036P	368
	110 V AC/DC	2 mA -30%/+25%	4 x 86 mcd	465 nm	10-4H22.1036P	369
White	72 V AC/DC	2,2 mA -30%/+25%	4 x 382 mcd		10-4H21.1039P	368
	110 V AC/DC	2 mA -30%/+25%	4 x 446 mcd		10-4H22.1039P	368

Additional information

- A suitable LED remover Part No. 700.006.0
- The luminous intensity stated is for when used with DC
- Electrical and optical data are measured at 25 °C
- The specified 72 and 110 VAC/VDC versions are built with a bridge rectifier
- The specified 72 and 110 VAC/VDC versions are built with a protection diode
- In case one LED fails, the other pair of still functioning LED›s is working. The light output then is half in order to indicate the malfunction and shows this way the need for replacement
- Luminosity and wave length variations caused by LED manufacturing processes may cause slight differences regarding the illumination. The customer has to decide what resistor shall be used to the LED

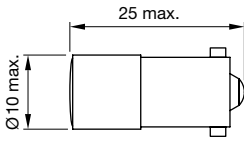

Dimensions [mm]

Wiring diagrams

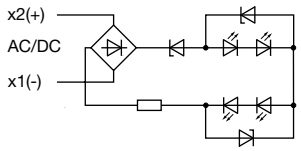

Wiring diagram 368

LED BA9s, EN 50155

Illumination colour	Operating voltage	Operation current	Lumi. Intensity	Part No.	Wiring diagram
White	24 V AC/DC -30% / +25%	7,5 mA -30%/+25%	700 mcd	10-2412.1089P	369

Additional information

- A suitable LED remover Part No. 700.006.0
- The luminous intensity stated is for when used with DC
- Electrical and optical data are measured at 25 °C
- The specified 24 VAC/VDC versions are built with a protection diode
- Specified 24 VAC/VDC versions are built with a bridge rectifier
- The new, white BA9s LED operates within a range of 16VDC to 34VDC. It conforms to the norms EN 50155 and IEEE 1476
- Luminosity and wave length variations caused by LED manufacturing processes may cause slight differences regarding the illumination. The customer has to decide what resistor shall be used to the LED

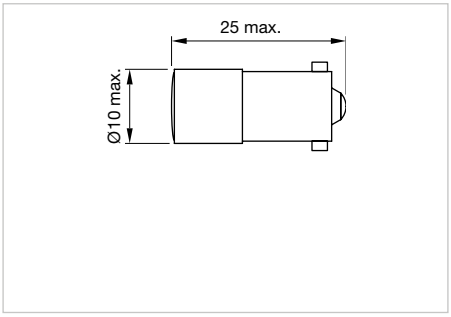

Dimensions [mm]

Wiring diagrams

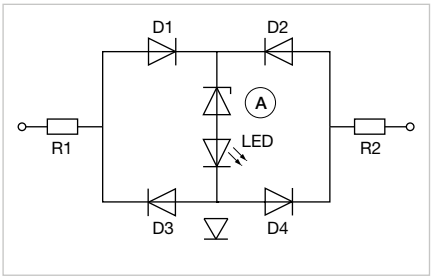

Lamp block for selector switch and illuminated pushbutton, 2 positions

Product attributes	Terminal kind of	Part No.	Wiring diagram
	Screw terminal	704.950.0	4
	Plug-in terminal	704.950.1	4
Terminals nickel plated and blank Cu/Sn	Double plug-in terminal	704.950.1/D	4
	Push-in terminal	704.950.3	4
Terminals nickel plated Cu/Sn	Double plug-in terminal	704.950.2/D	4
For ring cable shoe	Ring cable lug screw terminal	704.950.0B	4

Additional information

- When using the lamp block, the application guidelines must be observed.

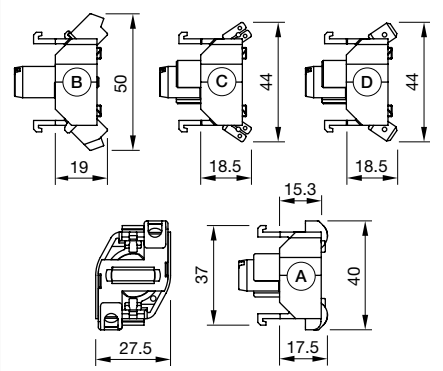

Dimensions [mm]
A = Screw terminal
B = Push-in terminal (PIT)
C = Plug-in terminal 6.3 mm x 0.8 mm
D = Double plug-in terminal 6.3 mm x 0.8 mm

Wiring diagrams

Wiring diagram 4

Lamp block for selector switch 3 positions

Product attributes	Terminal kind of	Part No.	Wiring diagram
	Screw terminal	704.951.0	4
	Plug-in terminal	704.951.1	4
Terminals nickel plated and blank Cu/Sn	Double plug-in terminal	704.951.1/D	4
	Push-in terminal	704.951.3	4

Additional information

- When using the lamp block, the application guidelines must be observed.

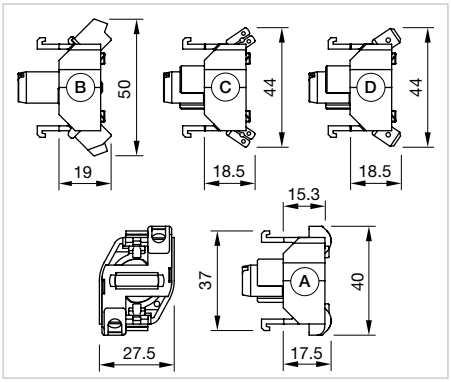

Dimensions [mm]
A = Screw terminal
B = Push-in terminal (PIT)
C = Plug-in terminal 6.3 mm x 0.8 mm
D = Double plug-in terminal 6.3 mm x 0.8 mm

Wiring diagrams

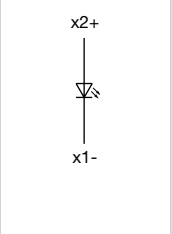

Wiring diagram 4

Dual lamp block

Operating voltage	Operation current	Terminal kind of	Part No.	Wiring diagram	Compo-nent Layout
24 V AC/DC (-30% / +25%)	Typ. 8 mA	Push-in terminal	704.952.129.3	375	104
110 V AC/DC (-30% / +25%)	Typ. 8 mA	Push-in terminal	704.952.159.3	375	104

Additional information

- When using the lamp block, the application guidelines must be observed.

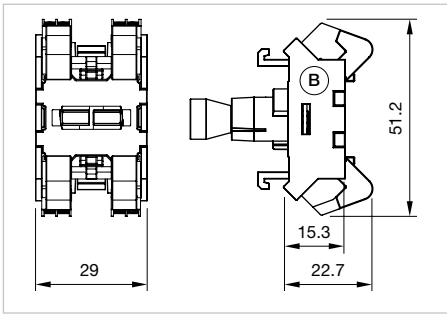

Dimensions [mm]
B = Push-in terminal (PIT)

Wiring diagrams

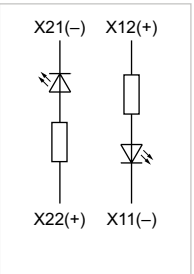

Component layouts

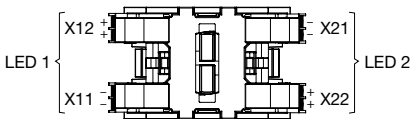

Component layout 104

Snap-action switching element with push-in terminal

Switching voltage	Switching current	Contacts	Contact material	Terminal	Part No.	Wiring diagram
250.00 V	6.00 A	1 NO	Gold	Push-in terminal	704.907.1	376
	6.00 A	1 NC	Gold	Push-in terminal	704.907.2	377
	6.00 A	2 NO	Gold	Push-in terminal	704.907.3	378
	6.00 A	2 NC	Gold	Push-in terminal	704.907.4	379
	6.00 A	1 NC / 1 NO	Gold	Push-in terminal	704.907.5	380
	6.00 A	1 NO	Silver	Push-in terminal	704.908.1	376
	6.00 A	1 NC	Silver	Push-in terminal	704.908.2	377
	6.00 A	2 NO	Silver	Push-in terminal	704.908.3	378
	6.00 A	2 NC	Silver	Push-in terminal	704.908.4	379
	6.00 A	1 NC / 1 NO	Silver	Push-in terminal	704.908.5	380

Contacts: NC = Normally closed, NO = Normally open

Additional information

- When using the switching element, the application guidelines must be observed.
- For the third switching element the terminal marking insert is to be ordered separately
- Operating temperature: Other temperatures on request

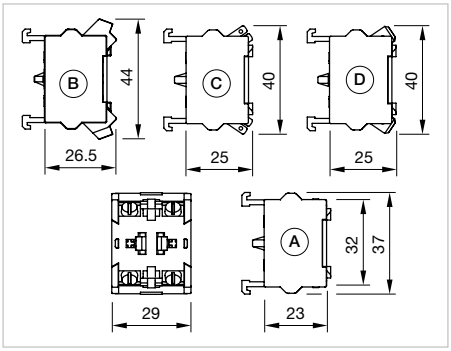

Dimensions [mm]
A = Screw terminal
B = Push-in terminal (PIT)
C = Plug-in terminal 6.3 mm x 0.8 mm
D = Double plug-in terminal 6.3 mm x 0.8 mm

Wiring diagrams

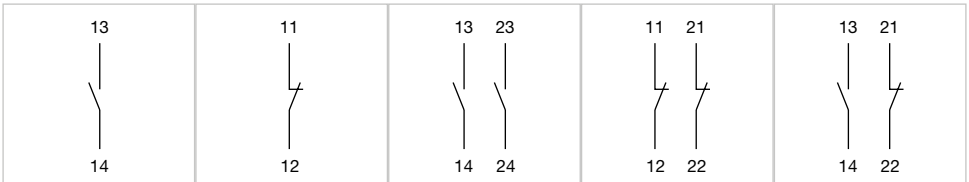

Wiring diagram 376	Wiring diagram 377	Wiring diagram 378	Wiring diagram 379	Wiring diagram 380

Slow-make switching element with push-in terminal

Switching voltage	Switching current	Contacts	Contact material	Terminal	Part No.	Wiring diagram
250.00 V	6.00 A	1 NO	Gold	Push-in terminal	704.917.1	376
	6.00 A	1 NC	Gold	Push-in terminal	704.917.2	377
	6.00 A	2 NO	Gold	Push-in terminal	704.917.3	378
	6.00 A	2 NC	Gold	Push-in terminal	704.917.4	379
	6.00 A	1 NC / 1 NO	Gold	Push-in terminal	704.917.5	380
	6.00 A	1 NO	Silver	Push-in terminal	704.918.1	376
	6.00 A	1 NC	Silver	Push-in terminal	704.918.2	377
	6.00 A	2 NO	Silver	Push-in terminal	704.918.3	378
	6.00 A	2 NC	Silver	Push-in terminal	704.918.4	379
	6.00 A	1 NC / 1 NO	Silver	Push-in terminal	704.918.5	380

Contacts: NC = Normally closed, NO = Normally open

Additional information

- When using the switching element, the application guidelines must be observed.
- For the third switching element the terminal marking insert is to be ordered separately
- Operating temperature: Other temperatures on request

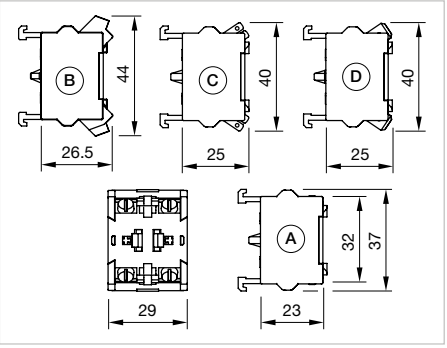

Dimensions [mm]
A = Screw terminal
B = Push-in terminal (PIT)
C = Plug-in terminal 6.3 mm x 0.8 mm
D = Double plug-in terminal 6.3 mm x 0.8 mm

Wiring diagrams

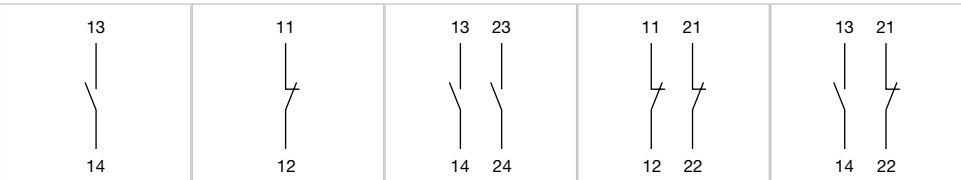

Wiring diagram 376	Wiring diagram 377	Wiring diagram 378	Wiring diagram 379	Wiring diagram 380

Snap-action switching element with plug-in terminal

Switching voltage	Switching current	Contacts	Contact material	Terminal	Part No.	Wiring diagram
500.00 V	6.00 A	1 NO	Silver	Plug-in terminal, 6.3 x 0.8 mm	704.905.1	376
	6.00 A	1 NC	Silver	Plug-in terminal, 6.3 x 0.8 mm	704.905.2	377
	6.00 A	2 NO	Silver	Plug-in terminal, 6.3 x 0.8 mm	704.905.3	378
	6.00 A	2 NC	Silver	Plug-in terminal, 6.3 x 0.8 mm	704.905.4	379
	6.00 A	1 NC / 1 NO	Silver	Plug-in terminal, 6.3 x 0.8 mm	704.905.5	380

Contacts: NC = Normally closed, NO = Normally open

Additional information

- When using the switching element, the application guidelines must be observed.
- For the third switching element the terminal marking insert is to be ordered separately
- Operating temperature: Other temperatures on request

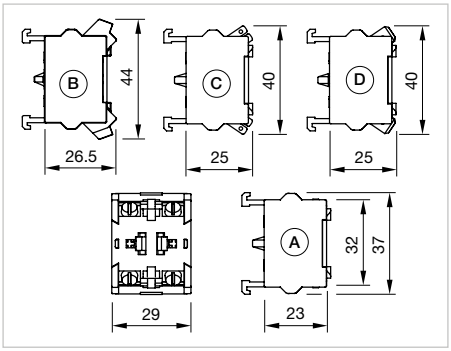

Dimensions [mm]
A = Screw terminal
B = Push-in terminal (PIT)
C = Plug-in terminal 6.3 mm x 0.8 mm
D = Double plug-in terminal 6.3 mm x 0.8 mm

Wiring diagrams

	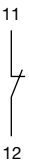		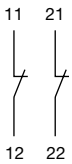	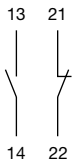
Wiring diagram 376	Wiring diagram 377	Wiring diagram 378	Wiring diagram 379	Wiring diagram 380

Slow-make switching element with plug-in terminal

Switching voltage	Switching current	Contacts	Contact material	Terminal	Part No.	Wiring diagram
500.00 V	6.00 A	1 NO	Silver	Plug-in terminal, 6.3 x 0.8 mm	704.915.1	376
	6.00 A	1 NC	Silver	Plug-in terminal, 6.3 x 0.8 mm	704.915.2	377
	6.00 A	2 NO	Silver	Plug-in terminal, 6.3 x 0.8 mm	704.915.3	378
	6.00 A	2 NC	Silver	Plug-in terminal, 6.3 x 0.8 mm	704.915.4	379
	6.00 A	1 NC / 1 NO	Silver	Plug-in terminal, 6.3 x 0.8 mm	704.915.5	380

Contacts: NC = Normally closed, NO = Normally open

Additional information

- When using the switching element, the application guidelines must be observed.
- For the third switching element the terminal marking insert is to be ordered separately
- Operating temperature: Other temperatures on request

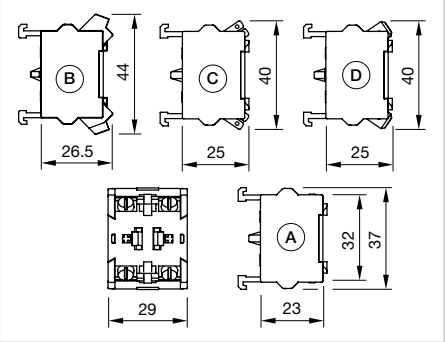

Dimensions [mm]
A = Screw terminal
B = Push-in terminal (PIT)
C = Plug-in terminal 6.3 mm x 0.8 mm
D = Double plug-in terminal 6.3 mm x 0.8 mm

Wiring diagrams

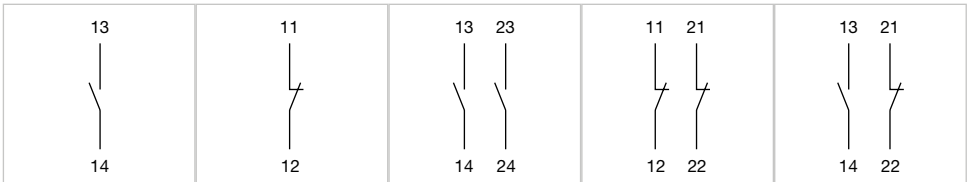

Wiring diagram 376	Wiring diagram 377	Wiring diagram 378	Wiring diagram 379	Wiring diagram 380

Snap-action switching element with double plug-in terminal

Switching voltage	Switching current	Contacts	Contact material	Terminal	Part No.	Wiring diagram
500.00 V	6.00 A	1 NO	Gold	Double plug-in terminal, 6.3 x 0.8 mm	704.901.1/D	376
	6.00 A	1 NC	Gold	Double plug-in terminal, 6.3 x 0.8 mm	704.901.2/D	377
	6.00 A	2 NO	Gold	Double plug-in terminal, 6.3 x 0.8 mm	704.901.3/D	378
	6.00 A	2 NC	Gold	Double plug-in terminal, 6.3 x 0.8 mm	704.901.4/D	379
	6.00 A	1 NC / 1 NO	Gold	Double plug-in terminal, 6.3 x 0.8 mm	704.901.5/D	380
	6.00 A	1 NO	Silver	Double plug-in terminal, 6.3 x 0.8 mm	704.905.1/D	376
	6.00 A	2 NO	Silver	Double plug-in terminal, 6.3 x 0.8 mm	704.905.3/D	378
	6.00 A	2 NC	Silver	Double plug-in terminal, 6.3 x 0.8 mm	704.905.4/D	379
	6.00 A	1 NC / 1 NO	Silver	Double plug-in terminal, 6.3 x 0.8 mm	704.905.5/D	380

Contacts: NC = Normally closed, NO = Normally open

Additional information

- When using the switching element, the application guidelines must be observed.
- For the third switching element the terminal marking insert is to be ordered separately
- Operating temperature: Other temperatures on request

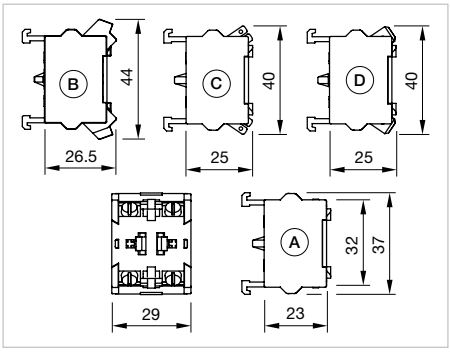

Dimensions [mm]
A = Screw terminal
B = Push-in terminal (PIT)
C = Plug-in terminal 6.3 mm x 0.8 mm
D = Double plug-in terminal 6.3 mm x 0.8 mm

Wiring diagrams

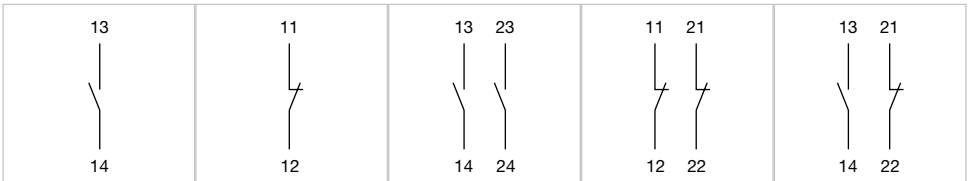

Wiring diagram 376	Wiring diagram 377	Wiring diagram 378	Wiring diagram 379	Wiring diagram 380

Slow-make switching element with double plug-in terminal

Switching voltage	Switching current	Contacts	Contact material	Terminal	Part No.	Wiring diagram
500.00 V	6.00 A	1 NO	Silver	Double plug-in terminal, 6.3 x 0.8 mm	704.915.1/D	376
	6.00 A	1 NC	Silver	Double plug-in terminal, 6.3 x 0.8 mm	704.915.2/D	377
	6.00 A	2 NO	Silver	Double plug-in terminal, 6.3 x 0.8 mm	704.915.3/D	378
	6.00 A	2 NC	Silver	Double plug-in terminal, 6.3 x 0.8 mm	704.915.4/D	379
	6.00 A	1 NC / 1 NO	Silver	Double plug-in terminal, 6.3 x 0.8 mm	704.915.5/D	380

Contacts: NC = Normally closed, NO = Normally open

Additional information

- When using the switching element, the application guidelines must be observed.
- For the third switching element the terminal marking insert is to be ordered separately
- Operating temperature: Other temperatures on request

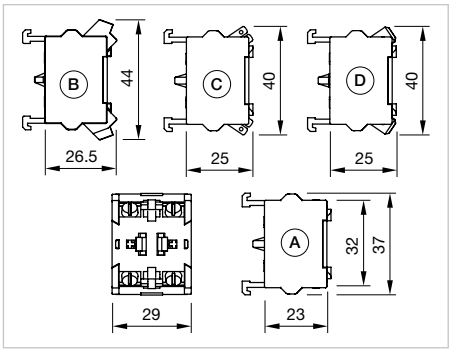

Dimensions [mm]
A = Screw terminal
B = Push-in terminal (PIT)
C = Plug-in terminal 6.3 mm x 0.8 mm
D = Double plug-in terminal 6.3 mm x 0.8 mm

Wiring diagrams

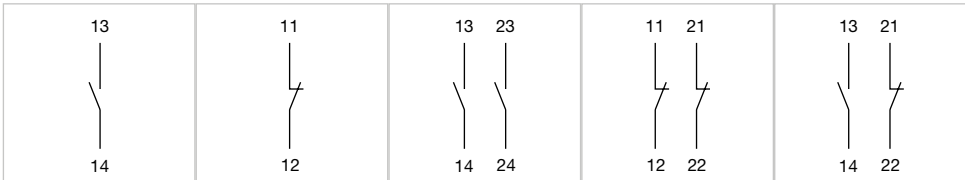

Wiring diagram 376	Wiring diagram 377	Wiring diagram 378	Wiring diagram 379	Wiring diagram 380

Snap-action switching element with screw terminal

Switching voltage	Switching current	Contacts	Contact material	Terminal	Part No.	Wiring diagram
500.00 V	10.00 A	1 NO	Silver	Screw terminal	704.900.1	376
	10.00 A	1 NC	Silver	Screw terminal	704.900.2	377
	10.00 A	2 NO	Silver	Screw terminal	704.900.3	378
	10.00 A	2 NC	Silver	Screw terminal	704.900.4	379
	10.00 A	1 NC / 1 NO	Silver	Screw terminal	704.900.5	380
	10.00 A	1 NO	Gold	Screw terminal	704.901.1	376
	10.00 A	1 NC	Gold	Screw terminal	704.901.2	377
	10.00 A	2 NO	Gold	Screw terminal	704.901.3	378
	10.00 A	2 NC	Gold	Screw terminal	704.901.4	379
	10.00 A	1 NC / 1 NO	Gold	Screw terminal	704.901.5	380
	10.00 A	1 NO	Palladium	Screw terminal	704.902.1	376
	10.00 A	1 NC	Palladium	Screw terminal	704.902.2	377
	10.00 A	2 NO	Palladium	Screw terminal	704.902.3	378
	10.00 A	2 NC	Palladium	Screw terminal	704.902.4	379
	10.00 A	1 NC / 1 NO	Palladium	Screw terminal	704.902.5	380

Contacts: NC = Normally closed, NO = Normally open

Additional information

- When using the switching element, the application guidelines must be observed.
- For the third switching element the terminal marking insert is to be ordered separately
- Operating temperature: Other temperatures on request

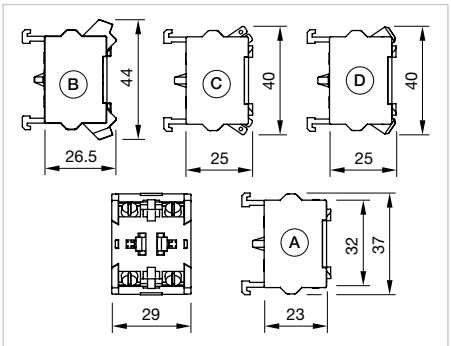

Dimensions [mm]
A = Screw terminal
B = Push-in terminal (PIT)
C = Plug-in terminal 6.3 mm x 0.8 mm
D = Double plug-in terminal 6.3 mm x 0.8 mm

Wiring diagrams

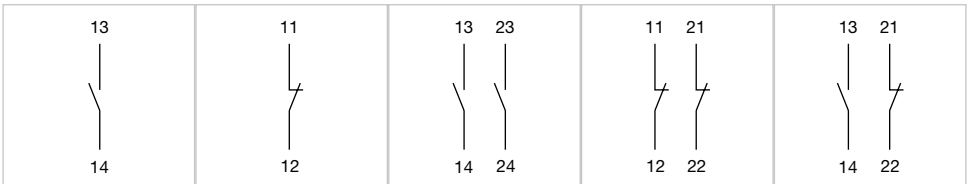

Wiring diagram 376	Wiring diagram 377	Wiring diagram 378	Wiring diagram 379	Wiring diagram 380

Slow-make switching element with screw terminal

Switching voltage	Switching current	Contacts	Contact material	Terminal	Part No.	Wiring diagram
500.00 V	10.00 A	1 NO	Silver	Screw terminal	704.910.1	376
	10.00 A	1 NC	Silver	Screw terminal	704.910.2	377
	10.00 A	2 NO	Silver	Screw terminal	704.910.3	378
	10.00 A	2 NC	Silver	Screw terminal	704.910.4	379
	10.00 A	1 NC / 1 NO	Silver	Screw terminal	704.910.5	380
	10.00 A	1 NO	Gold	Screw terminal	704.911.1	376
	10.00 A	1 NC	Gold	Screw terminal	704.911.2	377
	10.00 A	2 NO	Gold	Screw terminal	704.911.3	378
	10.00 A	2 NC	Gold	Screw terminal	704.911.4	379
	10.00 A	1 NC / 1 NO	Gold	Screw terminal	704.911.5	380
	10.00 A	1 NO	Palladium	Screw terminal	704.912.1	376
	10.00 A	2 NO	Palladium	Screw terminal	704.912.3	378
	10.00 A	2 NC	Palladium	Screw terminal	704.912.4	379
	10.00 A	1 NC / 1 NO	Palladium	Screw terminal	704.912.5	380

Contacts: NC = Normally closed, NO = Normally open

Additional information

- When using the switching element, the application guidelines must be observed.
- For the third switching element the terminal marking insert is to be ordered separately
- Operating temperature: Other temperatures on request

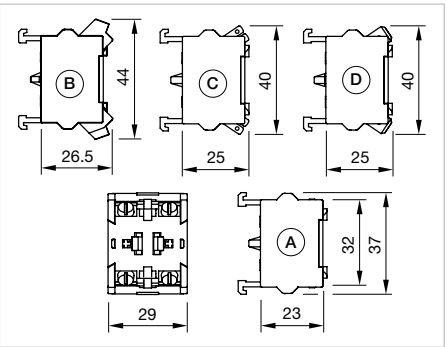

Dimensions [mm]
A = Screw terminal
B = Push-in terminal (PIT)
C = Plug-in terminal 6.3 mm x 0.8 mm
D = Double plug-in terminal 6.3 mm x 0.8 mm

Wiring diagrams

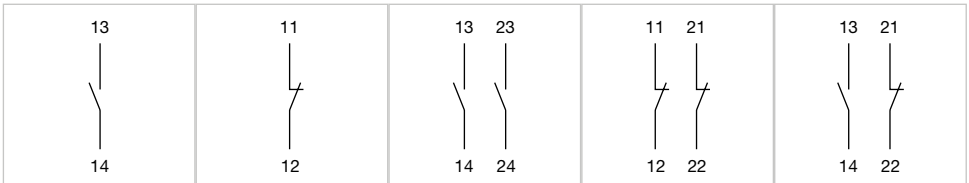

Wiring diagram 376	Wiring diagram 377	Wiring diagram 378	Wiring diagram 379	Wiring diagram 380

Snap-action switching element for ring cable shoe with screw terminal

Switching voltage	Switching current	Contacts	Contact material	Terminal	Part No.	Wiring diagram
500.00 V	10.00 A	1 NO	Silver	Ring cable lug screw terminal	704.900.1B	376
	10.00 A	1 NC	Silver	Ring cable lug screw terminal	704.900.2B	377
	10.00 A	2 NO	Silver	Ring cable lug screw terminal	704.900.3B	378
	10.00 A	2 NC	Silver	Ring cable lug screw terminal	704.900.4B	379
	10.00 A	1 NC / 1 NO	Silver	Ring cable lug screw terminal	704.900.5B	380

Contacts: NC = Normally closed, NO = Normally open

Additional information

- When using the switching element, the application guidelines must be observed.
- For the third switching element the terminal marking insert is to be ordered separately
- Operating temperature: Other temperatures on request

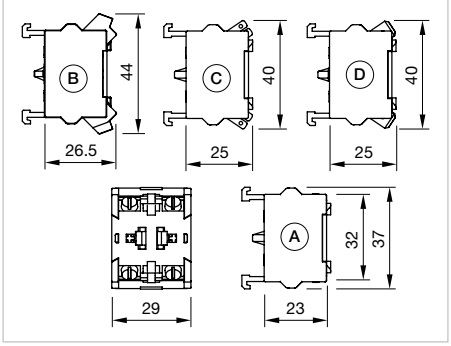

Dimensions [mm]
A = Screw terminal
B = Push-in terminal (PIT)
C = Plug-in terminal 6.3 mm x 0.8 mm
D = Double plug-in terminal 6.3 mm x 0.8 mm

Wiring diagrams

Wiring diagram 376

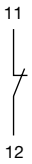

Wiring diagram 377

Wiring diagram 378

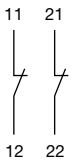

Wiring diagram 379

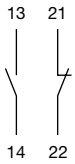

Wiring diagram 380

Slow-make switching element for ring cable shoe with screw terminal

Switching voltage	Switching current	Contacts	Contact material	Terminal	Part No.	Wiring diagram
500.00 V	10.00 A	1 NO	Silver	Ring cable lug screw terminal	704.910.1B	376
	10.00 A	1 NC	Silver	Ring cable lug screw terminal	704.910.2B	377
	10.00 A	2 NO	Silver	Ring cable lug screw terminal	704.910.3B	378
	10.00 A	2 NC	Silver	Ring cable lug screw terminal	704.910.4B	379
	10.00 A	1 NC / 1 NO	Silver	Ring cable lug screw terminal	704.910.5B	380
	10.00 A	2 NO	Gold	Ring cable lug screw terminal	704.911.3B	378
	10.00 A	2 NC	Gold	Ring cable lug screw terminal	704.911.4B	379
	10.00 A	1 NC / 1 NO	Gold	Ring cable lug screw terminal	704.911.5B	380

Contacts: NC = Normally closed, NO = Normally open

Additional information

- When using the switching element, the application guidelines must be observed.
- For the third switching element the terminal marking insert is to be ordered separately
- Operating temperature: Other temperatures on request

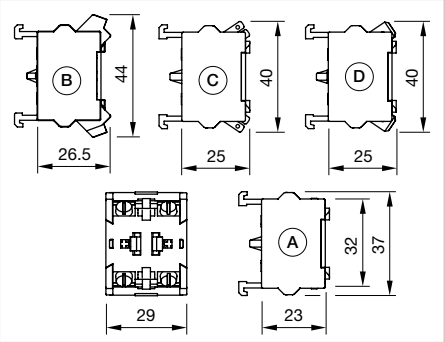

Dimensions [mm]
A = Screw terminal
B = Push-in terminal (PIT)
C = Plug-in terminal 6.3 mm x 0.8 mm
D = Double plug-in terminal 6.3 mm x 0.8 mm

Wiring diagrams

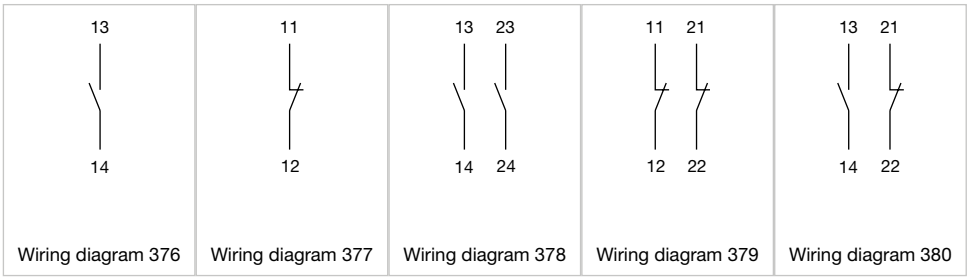

Wiring diagram 376 | Wiring diagram 377 | Wiring diagram 378 | Wiring diagram 379 | Wiring diagram 380

Slow-make switching element for emergency stop switch with push-in terminal

Switching voltage	Switching current	Contacts	Contact material	Terminal	Part No.	Wiring diagram
250.00 V	6.00 A	1 NO	Gold	Push-in terminal	704.917.1	376
	6.00 A	1 NC	Gold	Push-in terminal	704.917.2	377
	6.00 A	2 NO	Gold	Push-in terminal	704.917.3	378
	6.00 A	2 NC	Gold	Push-in terminal	704.917.4	379
	6.00 A	1 NC / 1 NO	Gold	Push-in terminal	704.917.5	380
	6.00 A	1 NO	Silver	Push-in terminal	704.918.1	376
	6.00 A	1 NC	Silver	Push-in terminal	704.918.2	377
	6.00 A	2 NO	Silver	Push-in terminal	704.918.3	378
	6.00 A	2 NC	Silver	Push-in terminal	704.918.4	379
	6.00 A	1 NC / 1 NO	Silver	Push-in terminal	704.918.5	380

Contacts: NC = Normally closed, NO = Normally open

Additional information

- When using the switching element, the application guidelines must be observed.
- For the third switching element the terminal marking insert is to be ordered separately
- Operating temperature: Other temperatures on request

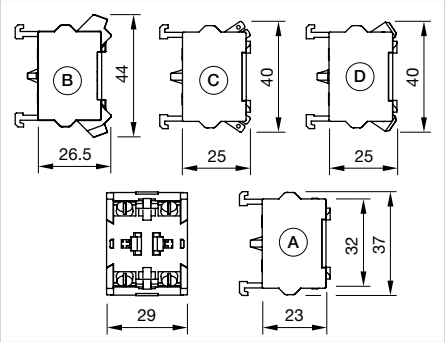

Dimensions [mm]
A = Screw terminal
B = Push-in terminal (PIT)
C = Plug-in terminal 6.3 mm x 0.8 mm
D = Double plug-in terminal 6.3 mm x 0.8 mm

Wiring diagrams

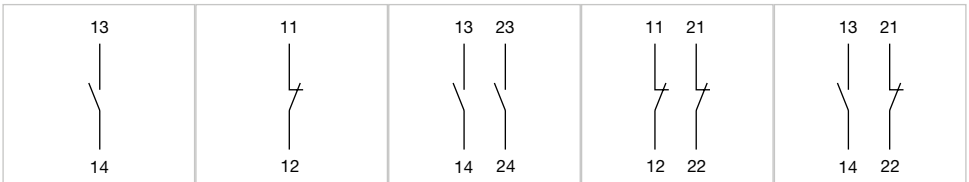

Wiring diagram 376	Wiring diagram 377	Wiring diagram 378	Wiring diagram 379	Wiring diagram 380

Slow-make switching element for emergency stop switch with plug-in terminal

Switching voltage	Switching current	Contacts	Contact material	Terminal	Part No.	Wiring diagram
500.00 V	6.00 A	1 NO	Silver	Plug-in terminal, 6.3 x 0.8 mm	704.915.1	376
	6.00 A	1 NC	Silver	Plug-in terminal, 6.3 x 0.8 mm	704.915.2	377
	6.00 A	2 NO	Silver	Plug-in terminal, 6.3 x 0.8 mm	704.915.3	378
	6.00 A	2 NC	Silver	Plug-in terminal, 6.3 x 0.8 mm	704.915.4	379
	6.00 A	1 NC / 1 NO	Silver	Plug-in terminal, 6.3 x 0.8 mm	704.915.5	380

Contacts: NC = Normally closed, NO = Normally open

Additional information

- When using the switching element, the application guidelines must be observed.
- For the third switching element the terminal marking insert is to be ordered separately
- Operating temperature: Other temperatures on request

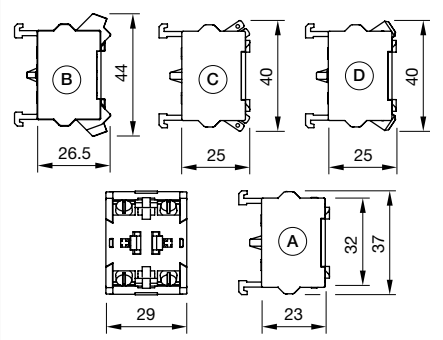

Dimensions [mm]
A = Screw terminal
B = Push-in terminal (PIT)
C = Plug-in terminal 6.3 mm x 0.8 mm
D = Double plug-in terminal 6.3 mm x 0.8 mm

Wiring diagrams

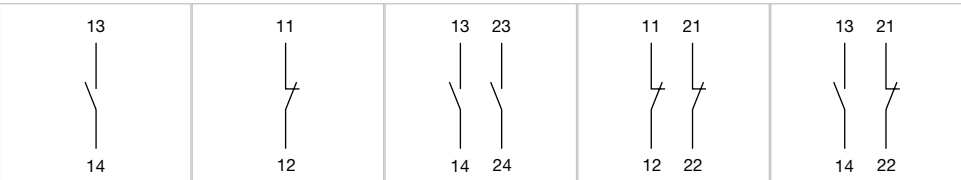

Wiring diagram 376	Wiring diagram 377	Wiring diagram 378	Wiring diagram 379	Wiring diagram 380

Slow-make switching element for emergency stop switch with double plug-in terminal

Switching voltage	Switching current	Contacts	Contact material	Terminal	Part No.	Wiring diagram
500.00 V	6.00 A	1 NO	Silver	Double plug-in terminal, 6.3 x 0.8 mm	704.915.1/D	376
	6.00 A	1 NC	Silver	Double plug-in terminal, 6.3 x 0.8 mm	704.915.2/D	377
	6.00 A	2 NO	Silver	Double plug-in terminal, 6.3 x 0.8 mm	704.915.3/D	378
	6.00 A	2 NC	Silver	Double plug-in terminal, 6.3 x 0.8 mm	704.915.4/D	379
	6.00 A	1 NC / 1 NO	Silver	Double plug-in terminal, 6.3 x 0.8 mm	704.915.5/D	380
	6.00 A	2 NO	Gold	Double plug-in terminal, 6.3 x 0.8 mm	704.911.3/D	378
	6.00 A	2 NC	Gold	Double plug-in terminal, 6.3 x 0.8 mm	704.911.4/D	379
	6.00 A	1 NC / 1 NO	Goild	Double plug-in terminal, 6.3 x 0.8 mm	704.911.5/D	380

Contacts: NC = Normally closed, NO = Normally open

Additional information

- When using the switching element, the application guidelines must be observed.
- For the third switching element the terminal marking insert is to be ordered separately
- Operating temperature: Other temperatures on request

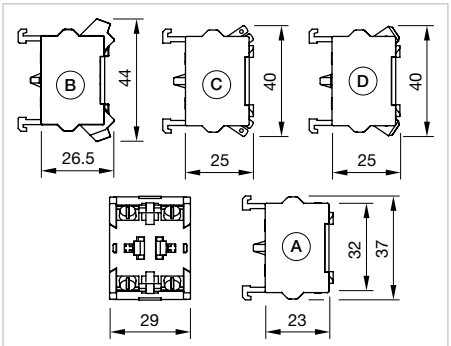

Dimensions [mm]
A = Screw terminal
B = Push-in terminal (PIT)
C = Plug-in terminal 6.3 mm x 0.8 mm
D = Double plug-in terminal 6.3 mm x 0.8 mm

Wiring diagrams

	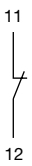	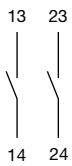	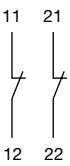	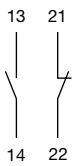
Wiring diagram 376	Wiring diagram 377	Wiring diagram 378	Wiring diagram 379	Wiring diagram 380

Slow-make switching element for emergency stop switch with screw terminal

Switching voltage	Switching current	Contacts	Contact material	Terminal	Part No.	Wiring diagram
500.00 V	10.00 A	1 NO	Silver	Screw terminal	704.910.1	376
	10.00 A	1 NC	Silver	Screw terminal	704.910.2	377
	10.00 A	2 NO	Silver	Screw terminal	704.910.3	378
	10.00 A	2 NC	Silver	Screw terminal	704.910.4	379
	10.00 A	1 NC / 1 NO	Silver	Screw terminal	704.910.5	380
	10.00 A	1 NO	Gold	Screw terminal	704.911.1	376
	10.00 A	1 NC	Gold	Screw terminal	704.911.2	377
	10.00 A	2 NO	Gold	Screw terminal	704.911.3	378
	10.00 A	2 NC	Gold	Screw terminal	704.911.4	379
	10.00 A	1 NC / 1 NO	Gold	Screw terminal	704.911.5	380
	10.00 A	1 NO	Palladium	Screw terminal	704.912.1	376
	10.00 A	2 NO	Palladium	Screw terminal	704.912.3	378
	10.00 A	2 NC	Palladium	Screw terminal	704.912.4	379
	10.00 A	1 NC / 1 NO	Palladium	Screw terminal	704.912.5	380

Contacts: NC = Normally closed, NO = Normally open

Additional information

- When using the switching element, the application guidelines must be observed.
- For the third switching element the terminal marking insert is to be ordered separately
- Operating temperature: Other temperatures on request

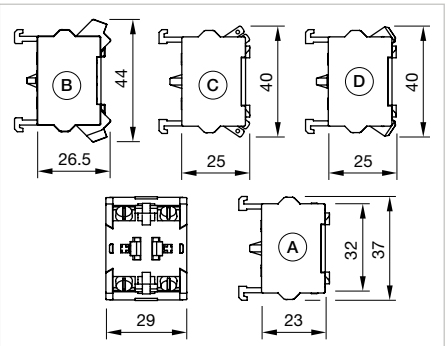

Dimensions [mm]
A = Screw terminal
B = Push-in terminal (PIT)
C = Plug-in terminal 6.3 mm x 0.8 mm
D = Double plug-in terminal 6.3 mm x 0.8 mm

Wiring diagrams

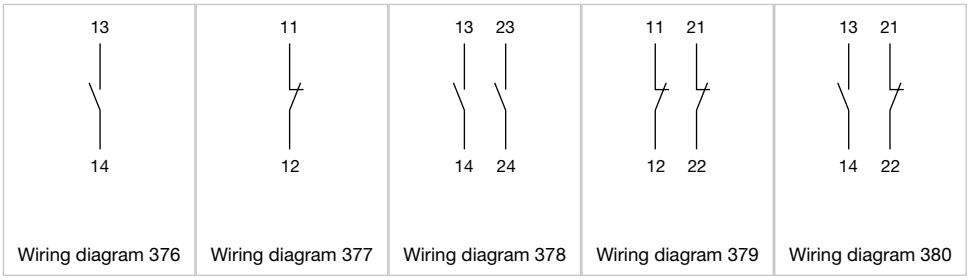

Wiring diagram 376	Wiring diagram 377	Wiring diagram 378	Wiring diagram 379	Wiring diagram 380

Slow-make switching element failsafe

Contacts	Contact material	Terminal	Product attributes	Part No.	Wiring diagram
1 NC / 1 FS	Silver	Screw terminal		704.910.4FS	381
	Gold	Screw terminal		704.911.4FS	381
	Silver	Screw terminal	For ring cable shoe	704.910.4BFS	381
	Gold	Screw terminal	For ring cable shoe	704.911.4BFS	381
	Gold	Double plug-in terminal, 6.3 x 0.8 mm		704.911.4/DFS	381
	Silver	Double plug-in terminal, 6.3 x 0.8 mm		704.915.4/DFS	381
	Gold	Push-in terminal		704.917.4FS	381
	Silver	Push-in terminal		704.918.4FS	381

Contacts: NC = Normally closed, NO = Normally open

Additional information

- When using the switching element, the application guidelines must be observed.
- For the third switching element the terminal marking insert is to be ordered separately
- Operating temperature: Other temperatures on request

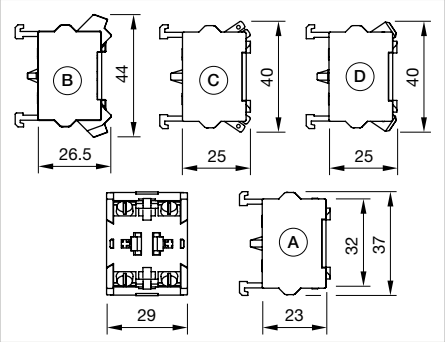

Dimensions [mm]
A = Screw terminal
B = Push-in terminal (PIT)
C = Plug-in terminal 6.3 mm x 0.8 mm
D = Double plug-in terminal 6.3 mm x 0.8 mm

Wiring diagrams

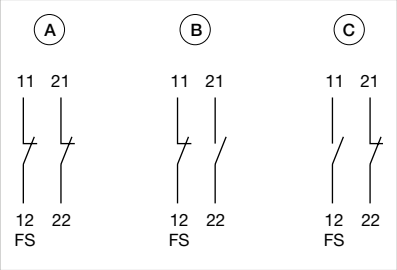

Kraus Naimer rotary switching element 30°

Switching positions	Switching positions	Multi-step switch	Stages	Terminal	Part No.	Wiring diagram
A = Rest, I = End	9 positions	1-pole	5	Screw terminal	704.8A236	382
A = Rest, K = End	10 positions	1-pole	5	Screw terminal	704.8A237	383
A = Rest, L = End	11 positions	1-pole	6	Screw terminal	704.8A238	384
A = Rest, M = End	12 positions	1-pole	6	Screw terminal	704.8A239	385
A = Rest (without stop)	12 positions	1-pole	6	Screw terminal	704.8A639	385

Additional information

- Switching positions and functions of the rotary switching elements are being produced according to customer specifications. Please contact your local EAO Sales Office

Wiring diagrams

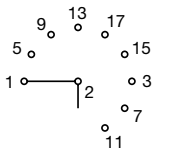

Wiring diagram 382

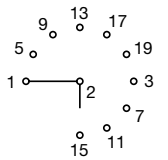

Wiring diagram 383

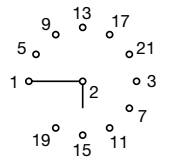

Wiring diagram 384

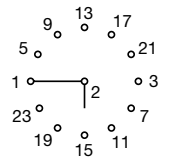

Wiring diagram 385

Kraus Naimer rotary switching element 45°

Switching positions	Switching positions	Multi-step switch	Stages	Terminal	Part No.	Wiring diagram
A = Rest, G = End	7 positions	1-pole	4	Screw terminal	704.8A234	386
	7 positions	2-pole	7	Screw terminal	704.8A254	387
A = Rest, H = End	8 positions	1-pole	4	Screw terminal	704.8A235	388
	8 positions	2-pole	8	Screw terminal	704.8A255	389

Additional information

- Switching positions and functions of the rotary switching elements are being produced according to customer specifications. Please contact your local EAO Sales Office

Wiring diagrams

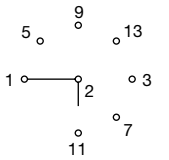

Wiring diagram 386

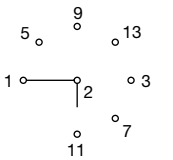

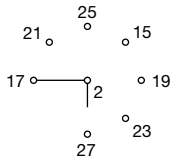

Wiring diagram 387

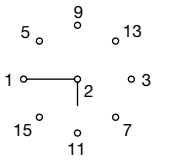

Wiring diagram 388

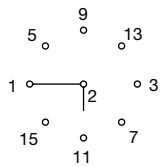

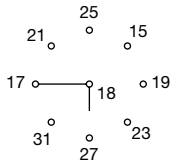

Wiring diagram 389

Kraus Naimer rotary switching element 60°

Switching positions	Switching positions	Multi-step switch	Stages	Terminal	Part No.	Wiring diagram
A = Rest, C = End	3 positions	1-pole	2	Screw terminal	704.8A230	390
	3 positions	1-pole, galvanically isolated	2	Screw terminal	704.8A730	391
	3 positions	2-pole	3	Screw terminal	704.8A250	392
	3 positions	3-pole	5	Screw terminal	704.8A270	393
A = Rest, D = End	4 positions	1-pole	2	Screw terminal	704.8A231	394
	4 positions	1-pole, galvanically isolated	2	Screw terminal	704.8A731	395
	4 positions	2-pole	4	Screw terminal	704.8A251	396
	4 positions	3-pole	6	Screw terminal	704.8A271	397
A = Rest, E = End	5 positions	1-pole	3	Screw terminal	704.8A232	398
	5 positions	2-pole	5	Screw terminal	704.8A252	399
	5 positions	3-pole	8	Screw terminal	704.8A272	400
A = Rest, F = End	6 positions	1-pole	3	Screw terminal	704.8A233	401
	6 positions	2-pole	6	Screw terminal	704.8A253	402

Additional information

- Switching positions and functions of the rotary switching elements are being produced according to customer specifications. Please contact your local EAO Sales Office

Wiring diagrams

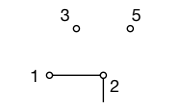

Wiring diagram 390

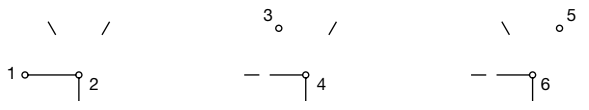

Wiring diagram 391

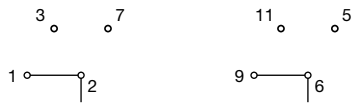

Wiring diagram 392

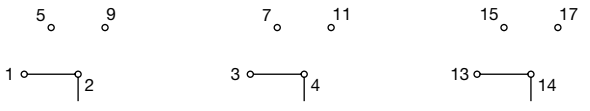

Wiring diagram 393

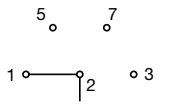

Wiring diagram 394

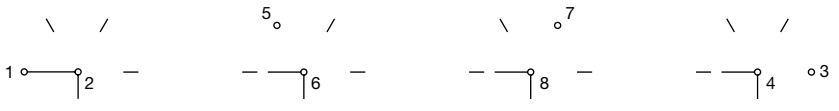

Wiring diagram 395

Wiring diagram 396

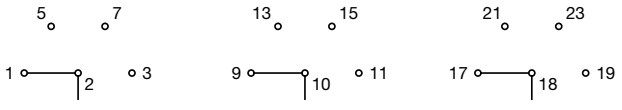

Wiring diagram 397

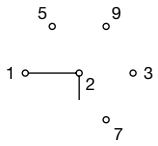

Wiring diagram 398

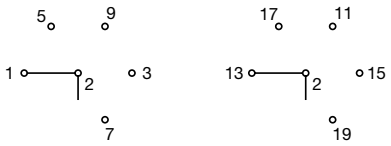

Wiring diagram 399

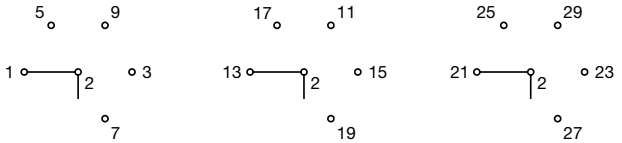

Wiring diagram 400

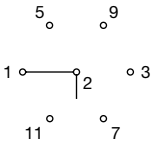

Wiring diagram 401

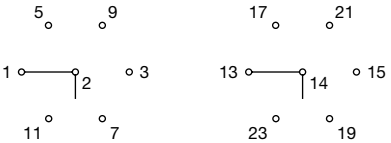

Wiring diagram 402

Wiring diagrams

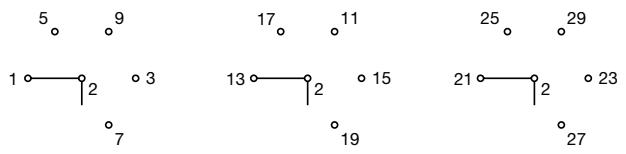

Wiring diagram 400

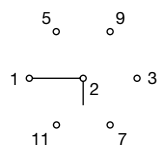

Wiring diagram 401

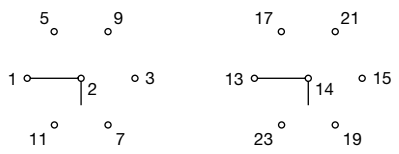

Wiring diagram 402

Flasher element

Product attributes	Operating voltage	Operation current	Terminal	Part No.	Wiring diagram
Lamp voltage/-current 130 V, 20 mA	230 / 230,00 / 130,00 V AC/DC ±6%		Screw terminal	704.943.0	374
Lamp voltage/- current 60 V, 33 mA	115,00 / 60,00 V AC/DC +10%		Screw terminal	704.943.1	374
Lamp voltage/-current 130 V, 3 mA	130 / 130,00 / 130,00 V AC/DC +10%		Push-in terminal	704.943.2P	374
	130 / 130,00 / 130,00 V AC/DC +10%		Screw terminal	704.943.2	374
Lamp voltage/-current 24 V, 10 ... 85 mA	24 / 24,00 / 24,00 V AC/DC ±15 %	10 / 85,00 mA	Screw terminal	704.943.5	374

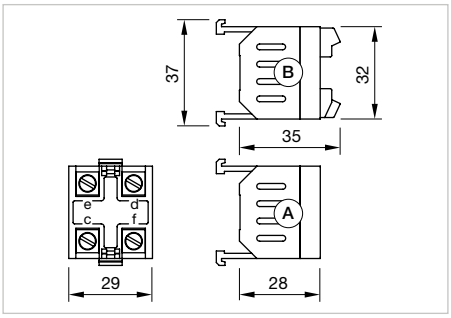

Dimensions [mm]
A = Screw terminal
Push-in terminal (PIT)

Wiring diagrams

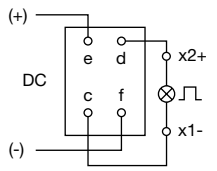

Wiring diagram 374

Lamp transformer

Part No.	Wiring diagram
704.970.3	371
704.970.4	371
704.970.5	371
704.970.6	371

Additional information

- Lamp voltage/-current 24 VAC, 50 mA, 50/60 Hz

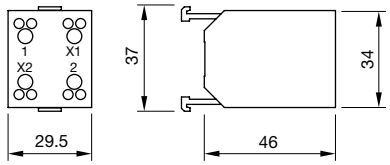

Dimensions [mm]

Wiring diagrams

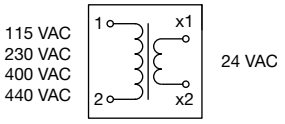

Wiring diagram 371

Front side

Legend frame

Product attributes	Dimension	Material	Colour	Surface	Mounting type	Part No.
For raised design	30 mm x 50 mm x 0.75 mm	Aluminium	Black	anodised	adhesive	704.968.2
For flush design	35 mm x 57.5 mm x 0.75 mm	Aluminium	Black	anodised	adhesive	704.968.3

Additional information

- The colour of anodised aluminium parts can vary due to technical production reasons

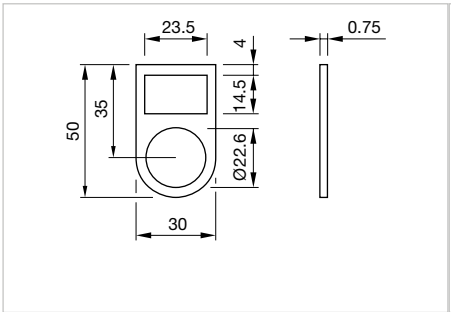

Dimensions [mm]
for Part No. 704.968.2

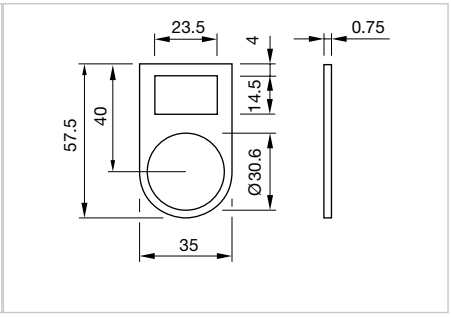

Dimensions [mm]
for Part No. 704.968.3

Legend plate

Product attributes	Dimension	Material	Colour	Surface	Mounting type	Part No.
For legend frame Part No.704.968.2 and 704.968.3	14.5 mm x 23.5 mm	Aluminium	Nature	anodised	adhesive	704.968.0
	14.5 mm x 23.5 mm	Aluminium	Black	anodised	adhesive	704.968.1

Additional information

- The colour of anodised aluminium parts can vary due to technical production reasons

Legend plate flush design

Dimension	Material	Colour	Surface	Mounting type	Part No.
18 mm x 35 mm	Aluminium	Nature	anodised	adhesive	704.968.4

Additional information

- For devices square with flush design
- The colour of anodised aluminium parts can vary due to technical production reasons

Emergency stop legend

Dimension	Material	Colour	Mounting cut-out	Marking	Part No.
Ø 60 mm	Plastic	Yellow	Ø 22.5 mm	NOT AUS	704.963.5
	Plastic	Yellow	Ø 22.5 mm	EMERGENCY STOP	704.963.6
	Plastic	Yellow	Ø 22.5 mm	ARRET D'URGENCE	704.963.7
	Plastic	Yellow	Ø 22.5 mm	NOT HALT	704.963.8
	Plastic	Yellow	Ø 22.5 mm	EN ISO 13850 symbol	704.963.9
Ø 90 mm	Plastic	Yellow	Ø 22.5 mm	NOT AUS	704.963.0
	Plastic	Yellow	Ø 22.5 mm	EMERGENCY STOP	704.963.1
	Plastic	Yellow	Ø 22.5 mm	ARRET D'URGENCE	704.963.2
	Plastic	Yellow	Ø 22.5 mm	NOT HALT	704.963.3
	Plastic	Yellow	Ø 22.5 mm	EN ISO 13850 symbol	704.963.4

Additional information

- Front panel thickness 3 mm max.

Legend plate rotary switch

Product attributes	Dimension	Material	Colour	Surface	Mounting type	Part No.
For raised design Ø 29 mm	48 mm x 60 mm	Aluminium	Black	anodised	adhesive	704.968.12

Additional information

- The colour of anodised aluminium parts can vary due to technical production reasons

Blind plug

Dimension	Material	Colour	Mounting cut-out	Part No.
Ø 28 mm	Plastic	Black	Ø 22.5 mm	704.960.4
Ø 22.5 mm	Plastic	Black	Ø 22.5 mm	704.964.7
Ø 36 mm	Plastic	Black	Ø 30.5 mm	704.964.8
35 mm x 35 mm	Plastic	Black	30 mm x 30 mm	704.964.9

Additional information

- Please note that bigger minimum distances are necessary

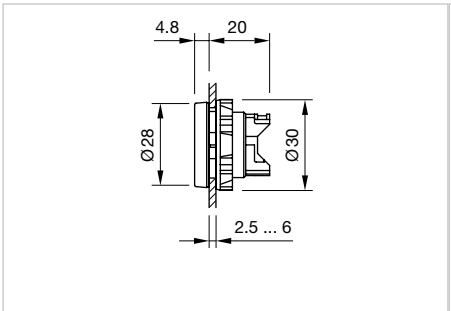

Dimensions [mm]
for Part No. 704.960.4

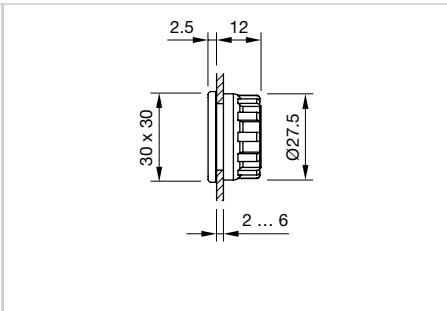

Dimensions [mm]
for Part No. 704.964.7

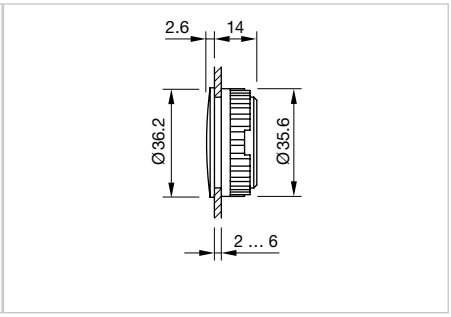

Dimensions [mm]
for Part No. 704.964.8

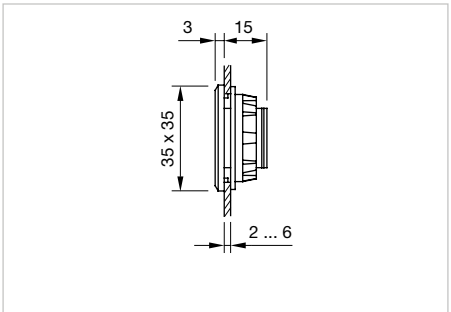

Dimensions [mm]
for Part No. 704.964.9

Spare key

Product attributes	Material	Part No.
The standard lock Ronis 251	Metal	704.989.251

Protective cap

Product attributes	Material	Colour	Optics	Part No.
Only together with lenses Part No. 704.602.X, 704.601.X and front rings Part No. 704.600.X	Silicone	Colourless	transparent	704.953.0

Additional information

- For Indicator and Illuminated pushbutton for IP68 protection

04 Accessories

Protective ring

Product attributes	Material	Colour	Surface	Part No.
With transparent silicone membrane (resistant to sea water), temperature resistance -40 °C … +85 °C	Brass		chrome	704.600.2
	Aluminium	Nature	anodised	704.600.3
With transparent Pebax membrane, temperature resistance -40 °C … +85 °C	Aluminium	Nature	anodised	704.600.5/A

Additional information

- For Illuminated pushbutton for front protection IP 67
- The colour of anodised aluminium parts can vary due to technical production reasons

Protective cover raised design

Product attributes	Material	Optics	Part No.
For pushbutton	Plastic	transparent	704.925.0
For pushbutton, with spring fitted	Plastic	transparent	704.925.3
For selector switch	Plastic	transparent	704.925.2

Additional information

- Hinged, with means for sealing

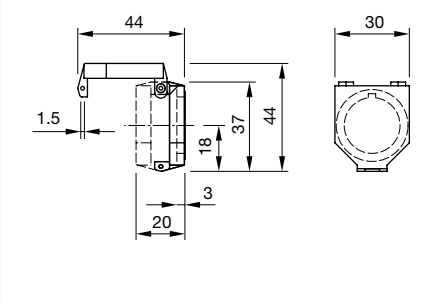

Dimensions [mm]

Protective cover square flush design

Product attributes	Dimension	Material	Optics	Mounting cut-out	Part No.
For pushbutton	38.5 mm x 45 mm	Plastic	transparent	30 mm x 30 mm	704.925.8

Additional information

- Hinged, with means for sealing
- Front panel thickness reduces by 2 mm
- Please note that bigger minimum distances are necessary

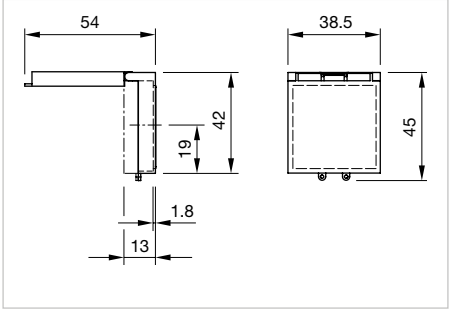

Dimensions [mm]

Protective cover round flush design

Product attributes	Dimension	Material	Colour	Surface	Part No.
With means for sealing, for pushbutton with mounting cut-outs Ø 30.5 mm	37 mm x 44.5 mm	Plastic	Colourless		704.925.7
Without cover locking hole, with spring fitted, with win-dow, for pushbuttonwith mounting cut-outs Ø 30.5 mm	38 mm x 50 mm	Aluminium	Nature	anodised	704.928.18
Without cover locking hole, for pushbutton and selector switch short lever with mounting cut-outs Ø 30.5 mm	38 mm x 50 mm	Aluminium	Nature	anodised	704.928.28
With means for sealing, for pushbutton and selector switch short lever with mounting cut-outs Ø 30.5 mm	38 mm x 50 mm	Aluminium	Nature	anodised	704.928.38

Additional information

- Hinged
- Front panel thickness reduces by 2 mm
- Please note that bigger minimum distances are necessary
- The colour of anodised aluminium parts can vary due to technical production reasons

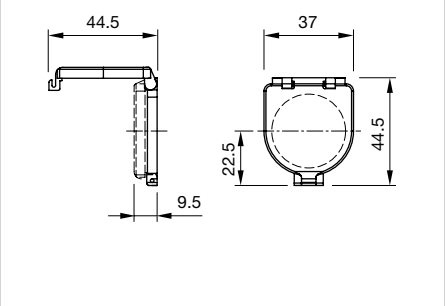

Dimensions [mm]
for Part No. 704.925.7

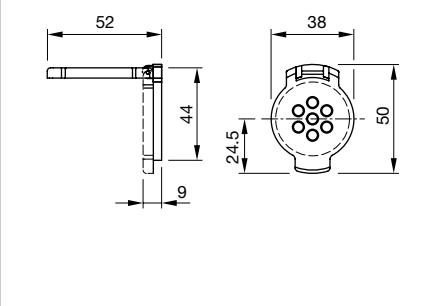

Dimensions [mm]
for Part No. 704.928.18

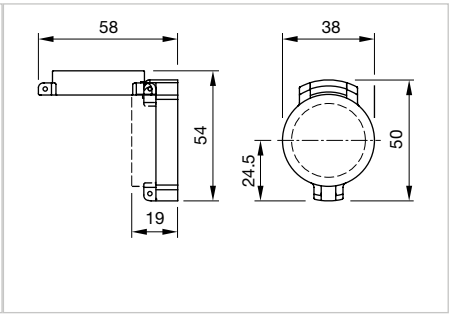

Dimensions [mm]
for Part No. 704.928.28, 704.928.38

04 Accessories

E stop protective shroud

Dimension	Material	Colour	Marking	Part No.
Ø 65 mm	Plastic	Yellow		704.927.6
	Plastic	Yellow	NOT-AUS	704.927.6A
	Plastic	Yellow	EMERGENCY-STOP	704.927.6B

Additional information

- Front panel thickness 1 … 2.5 mm other actuators
- Front panel thickness 1 … 2.5 mm with emergency stop switch
- With anti-twist device
- When using a protective shroud the e-stop or stop-switch has to be turned by 180° to be mounted. See dimensional drawing
- Do not use solvents when cleaning

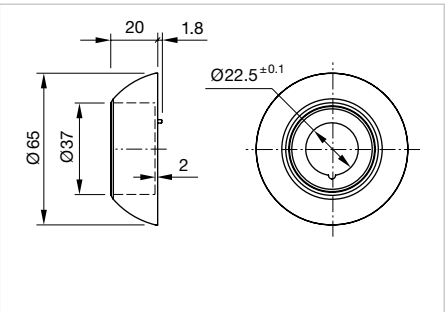

Dimensions [mm]

Protective shroud

Product attributes	Dimension	Material	Colour	Part No.
Use only for Part No. 704.064.2 und 704.066.2	Ø 50 mm	Plastic	Yellow	704.927.8
	Ø 83 mm	Plastic	Yellow	704.927.9

Additional information

- The protection shroud is not suitable for a proper use of emergency-stop. It can obstruct a spontaneous operation of the emergency-stop switch
- Use only for Part No. 704.064.2 und 704.066.2

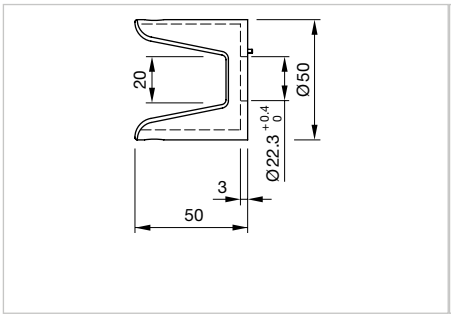

Dimensions [mm]

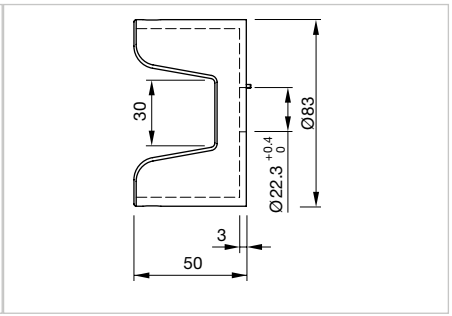

Dimensions [mm]

Marking foil square

Product attributes	Material	Colour	Optics	Part No.
For lens square, front illumination	Plastic	Colourless	transparent	704.707.7
For lens square, full-face illumination	Plastic	Colourless	transparent	704.706.7

Additional information

- Can be hot stamped

Rear side

Diode block

Terminal	Part No.	Wiring diagram
Push-in terminal	704.942.5P	370
Screw terminal	704.942.5	370

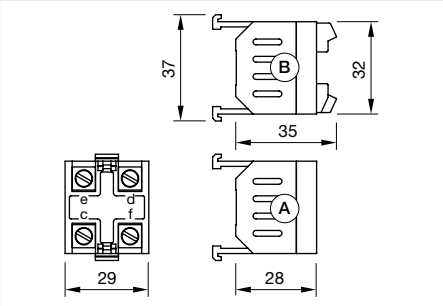

Dimensions [mm]
A = Screw terminal
Push-in terminal (PIT)

Wiring diagrams

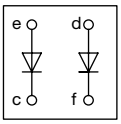

Wiring diagram 370

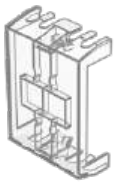

Terminal cover

Product attributes	Material	Terminal	Part No.
For covering of screw terminal	Plastic	Screw terminal	704.964.5

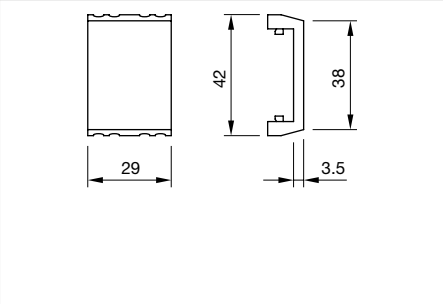

Dimensions [mm]

Terminal marking

Product attributes	Terminal	Marking	Part No.
2 NO for 1st or 2nd switching element	null	13/23 33/43	704.965.1
	null	24/14 44/34	704.965.2
2 NO for 3rd switching element	null	53/63 73/83	704.965.3
	null	64/54 84/74	704.965.4
2 NC for 1st or 2nd switching element	null	11/21 31/41	704.965.5
	null	22/12 42/32	704.965.6
2 NC for 3rd switching element	null	51/61 71/81	704.965.7
	null	62/52 82/72	704.965.8
1 NC + 1 NO for 1st or 2nd switching element	null	13/21 33/41	704.965.9
	null	22/14 42/34	704.966.0
1 NC + 1 NO for 3rd switching element	null	53/61 73/81	704.966.1
	null	62/54 82/74	704.966.2

Terminal plate empty

Product attributes	Dimension	Terminal	Part No.
5 spaces	62.5 mm x 60 mm x 15 mm	null	02-912.1
10 spaces	125 mm x 60 mm x 15 mm	null	02-912.2
15 spaces	187.6 mm x 60 mm x 15 mm	null	02-912.3
20 spaces	250 mm x 60 mm x 15 mm	null	02-912.4

Additional information

- For fitting with series resistors

Contact bridge

Material	Terminal	Part No.
Metal	null	704.990.1

Additional information

- For switching element with screw terminals
- Do not insert by Emergency-stopp switches and by stop switches
- Available in unit of 10 pieces

Resistor block

Product attributes	Material	Operating voltage	Terminal	Input voltage	Output voltage	Part No.	Wiring diagram
Lamp voltage/-current 130 V, 20 mA	Plastic	130 - 230,00 - 230,00 - 130,00 V AC	Screw terminal	230.00 V	130.00 V	704.941.0	372
Lamp voltage/- current 60 V, 33 mA	Plastic	33 - 60,00 - 125,00 - 60,00 V AC	Screw terminal	125.00 V	60.00 V	704.941.5	372

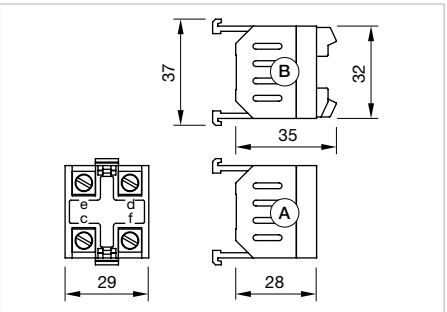

Dimensions [mm]
A = Screw terminal
Push-in terminal (PIT)

Wiring diagrams

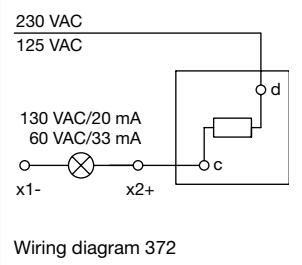

Wiring diagram 372

Side resistor diode block

Product attributes	Material	Operating voltage	Terminal	Input voltage	Output voltage	Part No.	Wiring diagram
Lamp voltage/-current 130 V, 20 mA	Plastic	130 - 230,00 - 230,00 - 130,00 V AC	Screw terminal	230.00 V	130.00 V	704.941.9	373

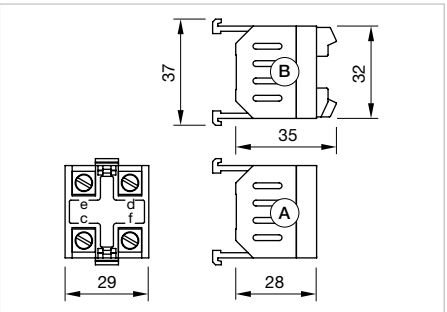

Dimensions [mm]
A = Screw terminal
Push-in terminal (PIT)

Wiring diagrams

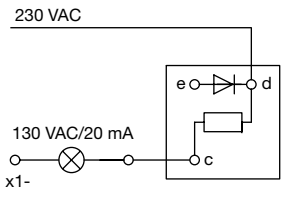

Wiring diagram 373

Mounting

Enclosure

Product attributes	Dimension	Material	Colour	IP Protection	Part No.
Bottom grey similar RAL 7035; cover lead-sealable, yellow similar RAL 1004	94 mm x 94 mm x 81 mm	Plastic	Grey	IP66	704.945.0
	65 mm x 65 mm x 81 mm	Plastic	Grey	IP66	704.945.7
	94 mm x 65 mm x 81 mm	Plastic	Grey	IP66	704.945.8
With mounting cut-out 1 x Ø 22.3 mm, with anti-twist device	94 mm x 94 mm x 81 mm	Plastic	Grey	IP66	704.945.1
With mounting cut-out 2 x Ø 22.3 mm, with anti-twist device	130 mm x 94 mm x 81 mm	Plastic	Grey	IP66	704.945.2
With mounting cut-out 3 x Ø 22.3 mm, with anti-twist device	180 mm x 94 mm x 81 mm	Plastic	Grey	IP66	704.945.3
With mounting cut-out 4 x Ø 22.3 mm, with anti-twist device	180 mm x 182 mm x 110 mm	Plastic	Grey	IP66	704.945.4
With mounting cut-out 6 x Ø 22.3 mm, with anti-twist device	180 mm x 182 mm x 110 mm	Plastic	Grey	IP66	704.945.5

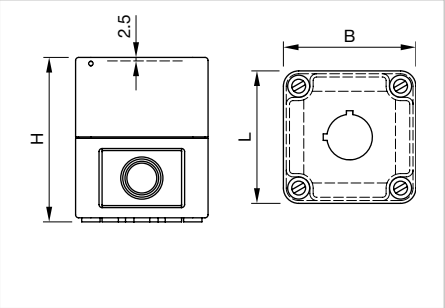

Dimensions [mm]

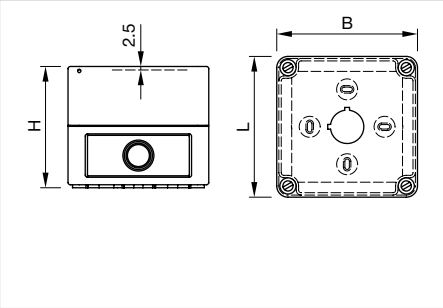

Dimensions [mm]
for Part No. 704.945.1, 704.945.2, 704.945.3, 704.945.4, 704.945.5

Lens plug

Product attributes	Material	Part No.
For mounting and dismantling of the round lens, flush design	Plastic	700.006.0

Lens remover

Product attributes	Material	Part No.
For dismantling of the square lens, flush design	Metal	98-968

Cable gland

Product attributes	Material	Colour	IP Protection	Thread	Part No.
With traction relief	Plastic	Grey	IP68	M16 x 1.5 mm	61-9481.6
	Plastic	Grey	IP68	M20 x 1.5 mm	704.945.6

Mounting plate

Product attributes	Material	Colour	Part No.
For separate mounting of lamp transformer, resistor block or capacitor block	Plastic	Grey	704.940.8

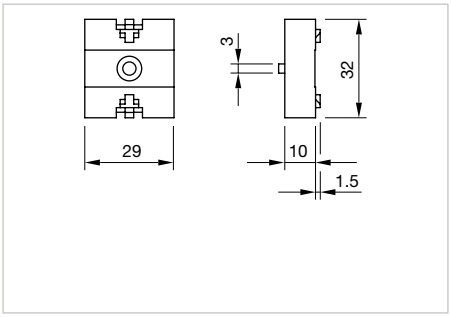

Dimensions [mm]

Mounting tool indicator

Product attributes	Material	Part No.
For Indicators full-face illumination, compact	Metal	700.005.0

Mounting tool key insert switch

Product attributes	Material	Part No.
For key insert switch	Metal	704.990.0

Reducing ring

Product attributes	Material	Colour	Surface	Part No.
	Aluminium	Black	anodised	704.960.0
	Aluminium	Nature	anodised	704.960.8
With slot for anti-twist device	Aluminium	Nature	anodised	704.960.8A

Additional information

- Devices Ø 22.3 mm in mounting cut-out Ø 30.5 mm
- The colour of anodised aluminium parts can vary due to technical production reasons

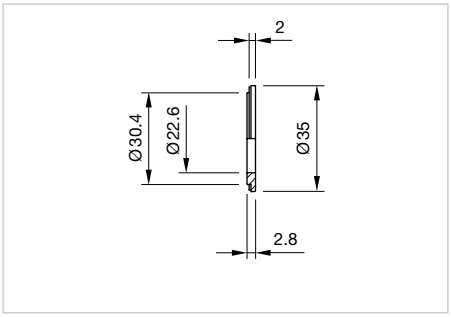

Dimensions [mm]

04 Accessories

On base

Product attributes	Material	Colour	Optics	Part No.
To snap-on, for seperate mounting of lamp transformer, resistor block or capacitor block	Plastic	Black		704.940.9
	Plastic	Colourless	transparent	704.941.1

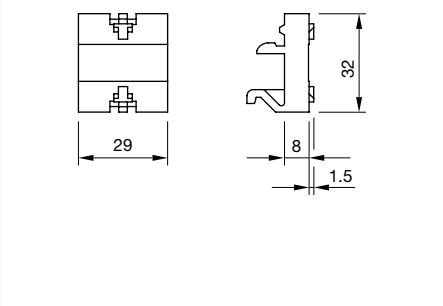

Dimensions [mm]

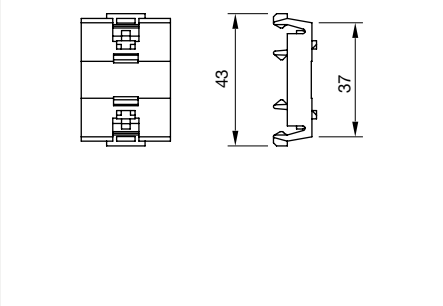

Dimensions [mm]

Reinforcement ring

Dimension	Material	Surface	Part No.
44 mm x 29 mm x 3 mm	Steel plate	galvanized	704.960.9

Additional information

- For thin front panels and plastic case

Slow-make switching element with VDE and UKCA

When using the switching element, the application guidelines must be observed.

Switching system

The double-break, slow-make switching element is equipped with one or two independent contact systems, acting as normally open or normally closed contact. The normally closed contact has forced opening.

Slow-make contacts with forced action are ideal for high switch ratings.

Up to three switching elements can be snapped to each actuator.

For the emergency-stop switch use the slow-make switching element (max. 2).

Special requirements for positive-opening auxiliary current switches

Positive opening travel	Emergency stop 12.5 mm
Minimum force	Emergency stop 50 N (actuating force at which is safely switched)
Max. travel	Emergency stop 12.5 mm

Material

Housing

The indicator lights/switches may be installed in enclosures with protection class 2 according to DIN EN 61140.
The enclosure must at least have enclosure class 2 according to UL50E.

Material of contact

Hard silver, gold-silver, silver-palladium (for aggressive atmospheres)

Switch housing

Plastic

Mechanical characteristics

Terminals

Screw terminal

- max. wire cross section	2.5 mm²
- stripping length wire	10 mm
- max. number of wire	2
- max. strand cross section	1.5 mm²
- stripping strands	use stranded wires only with wire end ferrules of 10 mm length
- max. number of strands	2

Only one polarity is allowed on each side when wiring.

Plug-in terminal 1 x 6.3 mm x 0.8 mm or 2 x 2.8 mm x 0.8 mm
For devises with plug-in connections, insulating sleeves are required and the mounting cut-out of 65 mm must be observed.

Double plug-in terminal 2 x 6.3 mm x 0.8 mm
For units with plug-in connections, insulating sleeves are required and the mounting cut-out of 65 mm must be observed.

Tightening torque

Screws at the plastic mounting flange max. 0.4 … 0.5 Nm
Screws at the metal mounting flange max. 0.25 … 0.3 Nm
Screws at switching element max. 0.8 Nm

Actuating force

1 Normally closed 2 N
1 Normally open 3 N

Actuating travel

Approx. 5.8 mm ± 0.2 mm

Mechanical lifetime

(with 1 switching element)

Pushbutton maintained action	1.5 million cycles of operation
Pushbutton momentary action	3 million cycles of operation
Selector switch maintained action	1.25 million cycles of operation
Selector switch momentary action	2.5 million cycles of operation
Emergency-stop switch	50 000 cycles of operation
Keylock switch maintained action	25 000 cycles of operation
Keylock switch momentary action	50 000 cycles of operation

Electrical characteristics

Standards

The switches comply with the “Standards for low-voltage switching devices” DIN EN 60947-5-1

Rated Insulation Voltage U_i

500 V, as per DIN EN 60947-5-1

Rated impulse withstand voltage U_{imp}

4 kV, according to EN/IEC 60947-5-1

Electrical life

50 000 cycles of operation

Thermal current I_{th}

Max. current at continuous operation and limit temperatures which do not exceed the specified max. values.
10 A

04 Technical data

Switching voltage and switching current
as per EN IEC 60947-5-1

voltage	DC13	AC15
24 V	4.0 A	8.0 A
60 V	1.5 A	8.0 A
110 V	1.0 A	
120 V		8.0 A
230 V	0.4 A	7.0 A
400 V	0.2 A	5.0 A
500 V	0.15 A	4.0 A

For voltages greater than U_i = 400 V, the grid dimensions must not be less than 35 mm x 35 mm.

Recommended minimum operational data
Gold-silver contacts:

Voltage	24 VDC	110 VDC
Current	5 mA	2 mA

Hard silver contacts:

Voltage	24 VDC	110 VDC
Current	50 mA	10 mA

Protection class
Indicators and switches, fit for mounting into devices with protection class II

Ambient conditions

Storage temperature
–40 °C … +85 °C

Operating temperature
–40 °C … +55 °C
(other temperatures on request)

Protection degree
IP00

Shock resistance
(single impacts, semi-sinusoidal)
300 m/s² pulse width 11 ms, as per EN IEC 60068-2-27

Vibration resistance
(sinusoidal)
100 m/s² at 10 Hz … 500 Hz, amplitude 0.75 mm, as per EN IEC 60068-2-6

Pollution degree
3

Climatic resistance
Relative humidity
10 ... 95 % non-condensing

Approvals

Approbations
CB (IEC 60947-5-1)
DNV
EAC
NFF
cULus
VDE

Conformities
CE
CCC
UKCA

Snap-action switching element with VDE and UKCA

When using the switching element, the application guidelines must be observed.

Switching system

The double-break, snap-action switching element is equipped with one or two independent contact systems, acting as normally open or normally closed contact. The snap-action switching element is fitted with self-cleaning contacts.

Up to three switching elements can be snapped to each actuator.

Snap-action switching elements are not permissible for emergency-stop pushbuttons!

Material

Housing
The indicator lights/switches may be installed in enclosures with protection class 2 according to DIN EN 61140.
The enclosure must at least have enclosure class 2 according to UL50E.

Material of contact
Hard silver, gold-silver, silver-palladium (for aggressive atmospheres)

Switch housing
Plastic

Mechanical characteristics

Terminals

Screw terminal

- max. wire cross section	2.5 mm²
- stripping length wire	10 mm
- max. number of wire	2
- max. strand cross section	1.5 mm²
- stripping strands	use stranded wires only with wire end ferrules of 10 mm length
- max. number of strands	2

Only one polarity is allowed on each side when wiring.

Plug-in terminal 1 x 6.3 mm x 0.8 mm or 2 x 2.8 mm x 0.8 mm
For devises with plug-in connections, insulating sleeves are required and the mounting cut-out of 65 mm must be observed.

Double plug-in terminal 2 x 6.3 mm x 0.8 mm
For units with plug-in connections, insulating sleeves are required and the mounting cut-out of 65 mm must be observed.

Tightening torque

Screws at the plastic mounting flange max. 0.4 – 0.5 Nm
Screws at the metal mounting flange max. 0.25 – 0.3 Nm
Screws at switching element max. 0.8 Nm

Actuating force

1 Normally closed 1.9 N
1 Normally open 2 N

Actuating travel

Approx. 5.8 mm ± 0.2 mm

Mechanical lifetime

(with 1 switching element)

Pushbutton maintained action	1.5 million cycles of operation
Pushbutton momentary action	3 million cycles of operation
Selector switch maintained action	1.25 million cycles of operation
Selector switch momentary action	2.5 million cycles of operation
Keylock switch maintained action	25 000 cycles of operation
Keylock switch momentary action	50 000 cycles of operation

Electrical characteristics

Standards

The switches comply with the “Standards for low-voltage switching devices” DIN EN 60947-5-1

Rated Insulation Voltage U_i

500 V, as per DIN EN 60947-5-1

Rated impulse withstand voltage U_{imp}

4 kV, according to EN / IEC 60947-5-1

Electrical life

50 000 cycles of operation

Thermal current I_{th}

Max. current at continuous operation and limit temperatures which do not exceed the specified max. values.
10 A

Switching voltage and switching current

as per EN IEC 60947-5-1

voltage	DC13	AC15
24 V	2.5 A	4.5 A
60 V	0.8 A	4.5 A
110 V	0.6 A	
120 V		4.5 A
230 V	0.2 A	4.5 A
400 V	0.15 A	4.0 A
500 V	0.07 A	2.5 A

For voltages greater than U_i = 400 V, the grid dimensions must not be less than 35 mm x 35 mm.

Recommended minimum operational data

Gold-silver contacts:

Voltage	5 VDC	24 VDC	110 VDC
Current	15 mA	5 mA	2 mA

Hard silver contacts:

Voltage	24 VDC	110 VDC
Current	50 mA	10 mA

Protection class

Indicators and switches, fit for mounting into devices with protection class II.

Ambient conditions

Storage temperature

– 40 °C … + 85 °C

Operating temperature

– 40 °C … + 55 °C
(other temperatures on request)

Protection degree

IP00

Shock resistance

(single impacts, semi-sinusoidal)
300 m / s² pulse width 11 ms, as per DIN EN 60068-2-27

Vibration resistance
(sinusoidal)
100 m4/s² at 10 Hz … 500 Hz, amplitude 0.75 mm, as per DIN EN 60068-2-6

Pollution degree
3

Climatic resistance
Relative humidity
10 ... 95 % non-condensing

Approvals

Approbations
CB (IEC 60947-5-1)
DNV
EAC
NFF
cULus
VDE

Conformities
CE
CCC
UKCA

Slow-make switching element PIT with VDE and UKCA

When using the switching element, the application guidelines must be observed.

Switching system

The double-break, slow-make switching element is equipped with one or two independent contact systems, acting as normally open or normally closed contact. The normally closed contact has forced opening.

Slow-make contacts with forced action are ideal for high switch ratings.

Up to three switching elements can be snapped to each actuator.

For the emergency-stop pushbutton use the slow-make switching element (max. 2).

Special requirements for positive-opening auxiliary current switches

Positive opening travel	Emergency stop 12.5 mm
Minimum force	Emergency stop 50 N (actuating force at which is safely switched)
Max. travel	Emergency stop 12.5 mm

Material

Housing
The indicator lights/switches may be installed in enclosures with protection class 2 according to DIN EN 61140.
The enclosure must at least have enclosure class 2 according to UL50E.

Material of contact
Hard silver and gold-silver

Switch housing
Plastic

Mechanical characteristics

Terminals
PIT push-in terminal

- max. wire cross section	1.0 mm²
- stripping length wire	8 mm
- max. number of wire	2
- max. strand cross section	0.75 mm²
- stripping strands	use stranded wires only with wire end ferrules of 8 mm length
- max. number of strands	2

Only one polarity is allowed on each side when wiring.

Tightening torque
Screws at the plastic mounting flange max. 0.4 – 0.5 Nm
Screws at the metal mounting flange max. 0.25 – 0.3 Nm

Actuating force
1 Normally closed 2 N
1 Normally open 3 N

Actuating travel
approx. 5.8 mm ± 0.2 mm

Mechanical lifetime
(with 1 switching element)

Pushbutton maintained action	1.5 million cycles of operation
Pushbutton momentary action	3 million cycles of operation
Selector switch maintained action	1.25 million cycles of operation
Selector switch momentary action	2.5 million cycles of operation
Emergency-stop switch	50 000 cycles of operation
Keylock switch maintained action	25 000 cycles of operation
Keylock switch momentary action	50 000 cycles of operation

Electrical characteristics

Standards
The switches comply with DIN EN 60947-1/EN IEC 60947-5-1

Rated Insulation Voltage U_i
500 V, as per DIN EN 60947-5-1

Rated impulse withstand voltage U_{imp}
4 kV, according to EN / IEC 60947-5-1

Electrical life
50 000 cycles of operation

Thermal current I_{th}
Max. current at continuous operation and limit temperatures which do not exceed the specified max. values.
6 A

Switching voltage and switching current
as per EN IEC 60947-5-1

voltage	DC13	AC15
24 V	4,0 A	6,0 A
48 V		6,0 A
60 V	1,5 A	
110 V	1,0 A	
120 V		6,0 A
230 V		7,0 A

For voltages greater than U_i = 400 V, the grid dimensions must not be less than 35 mm x 35 mm.

Recommended minimum operational data
Gold-silver contacts:
Voltage 24 VDC
Current 5 mA

Hard silver contacts:
Voltage 24 VDC
Current 50 mA

Protection class
Indicators and switches, fit for mounting into devices with protection class II

Ambient conditions

Storage temperature
– 40 °C … + 85 °C

Operating temperature
– 40 °C … + 55 °C
(other temperatures on request)

Protection degree
IP20

Shock resistance
(single impacts, semi-sinusoidal)
300 m / s² pulse width 11 ms, as per DIN EN 60068-2-27

Pollution degree
3

Climatic resistance
Relative humidity
10 ... 95 % non-condensing

Approvals

Approbations
CB (IEC 60947-5-1)
DNV
EAC
NFF
cULus
VDE

Conformities
CE
CCC
UKCA

Snap-action switching element PIT with VDE and UKCA

When using the switching element, the application guidelines must be observed.

Switching system

The double-break, snap-action switching element is equipped with one or two independent contact systems, acting as normally open or normally closed contact. The snap-action switching element is fitted with self-cleaning contacts.

Up to three switching elements can be snapped to each actuator.

Snap-action switching elements are not permissible for emergency stop pushbuttons!

Material

Housing
The indicator lights/switches may be installed in enclosures with protection class 2 according to DIN EN 61140.
The enclosure must at least have enclosure class 2 according to UL50E.

Material of contact
Hard silver and gold-silver

Switch housing
Plastic

Mechanical characteristics

Terminals
PIT push-in terminal

- max. wire cross section	1.0 mm²
- stripping length wire	8 mm
- max. number of wire	2
- max. strand cross section	0.75 mm²
- stripping strands	use stranded wires only with wire end ferrules of 8 mm length
- max. number of strands	2

Only one polarity is allowed on each side when wiring.

Tightening torque
Screws at the plastic mounting flange max. 0.4–0.5 Nm
Screws at the metal mounting flange max. 0.25–0.3 Nm

Actuating force
1 Normally closed 1.9 N
1 Normally open 2 N

Actuating travel
Approx. 5.8 mm ± 0.2 mm

Mechanical lifetime
(with 1 switching element)

Pushbutton maintained action	1.5 million cycles of operation
Pushbutton momentary action	3 million cycles of operation
Selector switch maintained action	1.25 million cycles of operation
Selector switch momentary action	2.5 million cycles of operation
Keylock switch maintained action	25 000 cycles of operation
Keylock switch momentary action	50 000 cycles of operation

Electrical characteristics

Standards
The switches comply with DIN EN 60947-1/DIN EN 60947-5-1

Rated Insulation Voltage U_i
500 V, as per DIN EN 60947-5-1

Rated impulse withstand voltage U_{imp}
4 kV, according to EN/IEC 60947-5-1

Electrical life
50 000 cycles of operation

Thermal current I_{th}
Max. current at continuous operation and limit temperatures which do not exceed the specified max. values.
6 A

Switching voltage and switching current
as per EN IEC 60947-5-1

voltage	DC13	AC15
24 V	2,5 A	6,0 A
48 V		6,0 A
60 V	0,8 A	
110 V	0,6 A	
120 V		6,0 A
230 V		6,0 A

For voltages greater than U_i = 400 V, the grid dimensions must not be less than 35 mm x 35 mm.

Recommended minimum operational data
Gold-silver contacts:
Voltage 24 VDC
Current 5 mA

Hard silver contacts:
Voltage 24 VDC
Current 50 mA

Protection class
Indicators and switches, fit for mounting into devices with protection class II

Ambient conditions

Storage temperature
–40 °C … +85 °C

Operating temperature
–40 °C … +55 °C
(other temperatures on request)

Protection degree
IP20

Shock resistance
(single impacts, semi-sinusoidal)
300 m/s² pulse width 11 ms, as per DIN EN 60068-2-27

Vibration resistance
(sinusoidal)
100 m/s² at 10 Hz … 500 Hz, as per DIN EN 60068-2-6 and EN 61373 Increased broad band noise, class 1B

Pollution degree
3

Climatic resistance
Relative humidity
10 ... 95 % non-condensing

Approvals

Approbations
CB (IEC 60947-5-1)
DNV
EAC
NFF
cULus
VDE

Conformities
CE
CCC
UKCA

Lamp block

When using the lamp block, the application guidelines must be observed.

Material

Housing
Plastic

Mechanical characteristics

Terminals
Screw terminal

- max. wire cross section	2.5 mm²
- stripping length wire	10 mm
- max. number of wire	2
- max. strand cross section	1.5 mm²
- stripping strands	use stranded wires only with wire end ferrules of 10 mm length
- max. number of strands	2

Only one polarity is allowed on each side when wiring.

Plug-in terminal 1 x 6.3 mm x 0.8 mm or 2 x 2.8 mm x 0.8 mm
For devises with plug-in connections, insulating sleeves are required and the mounting cut-out of 65 mm must be observed.

Double plug-in terminal 2 x 6.3 mm x 0.8 mm
For units with plug-in connections, insulating sleeves are required and the mounting cut-out of 65 mm must be observed.

Tightening torque
Screws at lamp block max. 0.5 Nm

Electrical characteristics

Standards
The switches comply with DIN EN 60947-1/DIN EN 60947-5-1

Illumination
Voltage 250 V max. (many different lamp types available)
Power 2.6 W max. (many different lamp types available)

04 Technical data

Ambient conditions

Storage temperature
–40 °C … +85 °C

Operating temperature
–40 °C … +55 °C
(other temperatures on request)

Protection degree
IP00

Shock resistance
(single impacts, semi-sinusoidal)
300 m / s² pulse width 11 ms, as per DIN EN 60068-2-27

Vibration resistance
(sinusoidal)
100 m / s² at 10 Hz … 500 Hz, as per DIN EN 60068-2-6 and EN 61373 Increased broad band noise, class 1B

Climatic resistance
Relative humidity
10 ... 95 % non-condensing

Lamp block PIT

When using the lamp block, the application guidelines must be observed.

Material

Housing
Plastic

Mechanical characteristics

Terminals

PIT push-in terminal	
- max. wire cross section	1.0 mm²
- stripping length wire	8 mm
- max. number of wire	2
- max. strand cross section	0.75 mm²
- stripping strands	use stranded wires only with wire end ferrules of 8 mm length
- max. number of strands	2

Electrical characteristics

Standards
The switches comply with EN IEC 60947-1/EN IEC 60947-5-1

Illumination
Voltage 250 V max. (many different lamp types available)
Power 2.6 W max. (many different lamp types available)

Ambient conditions

Storage temperature
–40 °C … +85 °C

Operating temperature
–40 °C … +55 °C
(other temperatures on request)

Protection degree
IP20

Shock resistance
(single impacts, semi-sinusoidal)
300 m / s² pulse width 11 ms, as per DIN EN 60068-2-27

Vibration resistance
(sinusoidal)
100 m / s² at 10 Hz … 500 Hz, as per DIN EN 60068-2-6 and EN 61373 Increased broad band noise, class 1B

Climatic resistance
Relative humidity
10 ... 95 % non-condensing

Dual lamp block

When using the lamp block, the application guidelines must be observed.

Material

Housing
Plastic

Mechanical characteristics

Terminals
PIT push-in terminal

- max. wire cross section	1.0 mm²
- stripping length wire	8 mm
- max. number of wire	2
- max. strand cross section	0.75 mm²
- stripping strands	use stranded wires only with wire end ferrules of 8 mm length
- max. number of strands	2

Electrical characteristics

Lighting
Illuminant = 2 SMD-LEDs white

Operating voltages
24 VDC (–30 % / +25 %)
110 VDC (–30 % / +25 %)

Operating current
Typ. 8 mA

Ambient conditions

Storage temperature
–40 °C … +85 °C

Operating temperature
–40 °C … +60 °C
(other temperatures on request)

Degree of protection
IP20

Resistance to shock
500 m/s², pulse duration 11 ms, according to EN IEC 60068-2-27 (semi-sinusoidal)

Broadband noise
5.72 m/s² per axis, 5 h (duration), class 1B according to DIN EN 61373

Climatic resistance
Relative humidity
10 ... 95 % non-condensing

Approvals

Approbations
UL-94 V0
EN 45545

Buzzer

Buzzer

System
Piezo disc

Material

Buzzer case
Plastic

Front cap
Flush design
Aluminium black anodised
Aluminium natural anodised

Raised design
Plastic
Metal = nickel-plated brass (sea-water proof)

Mechanical characteristics

Terminals
Plug-in terminal 2.8 mm x 0.5 mm

Tightening torque
For fixing nut max. 0.25 Nm

Acoustic characteristics

Frequency (tone)
Approx. 3.2 kHz continuous tone only

Sound pressure
95 db (A) ±8 dB at a distance of 0.1 m

Electrical characteristics

Operation Voltage/Current

Operation Voltage	24 VDC ±10 %
Operation Current	≤ 25 mA

Ambient conditions

Storage temperature
–40 °C … +85 °C

Operating temperature
–40 °C … +55 °C
(other temperatures on request)

Protection degree
As per DIN EN 60529, frontside
IP65

Approvals

Conformities
CE
2014/35/EU (LVD)
2011/65/EC (RoHS)

Actuator

Material

Front ring
Polyamide, Aluminium or Stainless steel

Mounting flange
Plastic, metal

Actuator housing
Plastic

Mechanical characteristics

Actuating force
Mounting style square flush 6.2 N
Other mounting styles 8 N

Actuating travel
Approx. 5.8 mm ± 0.2 mm

Mechanical lifetime
(with 1 switching element)

Pushbutton	≤ 3 million cycles of operation
Selector switch	≤ 2.5 million cycles of operation
Stop switch	≤ 50 000 cycles of operation
Fool proofed E-stop	≥ 50 000 cycles of operation
Keylock switch	≤ 50 000 cycles of operation
Key insert switches	≤ 250 000 cycles of operation

Keylock switch
The standard lock number is 251, the last digit of the device Part No. = 0 (example: 704.335.0).
Additional lock numbers are available:
252 last digit = 1; 253 last digit = 2; 254 last digit = 3
255 last digit = 4, 256 last digit = 5; 257 last digit = 6
258 last digit = 7; 259 last digit = 8; 260 last digit = 9

Electrical characteristics

Standards
The switches comply with the “Rules for low-voltage switching devices” EN IEC 60947-5-1

Ambient conditions

Storage temperature
−40 °C … +85 °C

Operating temperature
−40 °C … +55 °C
(other temperatures on request)

Protection degree
As per EN IEC 60529
IP65 front side (IP65 and IP67 Key insert switch)

Kraus Naimer rotary selector switching element

Mechanical characteristics

Terminals
Screw terminals
Terminal lead material copper wires only
Max. permissible wire gage:
Single-core or stranded wire 2 x 1.5 mm² (2 x AWG 14)
Flexible wire 2 x 1.5 mm² (2 x AWG 16)

Tightening torque
For fixing nut max. 0.25 Nm

Number of stages
1 to 8 positions max.

Number of contacts
1 to 16 max. normally open contacts
(contact positioning according circuit drawing)

Switching angle
Basic position of switching position “A” is 9 o’clock

Maintained action	Switching angle
12 max.	30°
8 max.	45°
6 max.	60°
4 max.	90°

Momentary action with release 24°
(provide at the beginning or at the end)

Standard type of Kraus & Naimer
CG4 Hard Silver contacts with 1 µm Gold layer
CG4-1 Hard Silver contacts with 35 µm Gold layer

04 Technical data

Electrical characteristics

Minimum Voltage
20 V

Rated Impulse Withstand Voltage U_{imp}
4 kV

Short Circuit Protection
Max. fuse size (gL-characteristic) 10 A
Rated short-time withstand current (1s-current) 90 A

Electrical characteristics for AC

Standards
The devices comply with: DIN EN 60947-3, VDE 0660 part 107

Rated Operational Voltage U_e
440 V

Rated Insulation Voltage U_i
440 V

Rated Thermal Current I_u / I_{th}
10 A

Rated Operational Current I_e
AC-15 Switching of control devices, contactors, valves etc.

110 V – 120 V	2.5 A
220 V – 240 V	2.5 A
380 V – 440 V	1.5 A

No load operation
10 A

AC-21A Switching of resistive loads, including moderate overloads
For switching of power > 1 kW
10 A

AC-22A Switching of combined resistive or low inductive loads including moderate overloads
220 V – 240 V 10 A

Rated Utilization Category
AC-2 Slip ring motor starting, reversing and plugging, star-delta starting 3 phase, 3 pole

220 V – 240 V	2.5 kW
380 V – 440 V	4.5 kW

AC-3 Direct-on-line starting, star-delta starting

3 phase, 3 pole	220 V – 240 V	2.50 kW
	380 V – 440 V	2.20 kW
1 phase, 2 pole	110 V – 120 V	0.30 kW
	220 V – 240 V	0.55 kW
	380 V – 440 V	0.75 kW

AC-Direct-on-line starting, reversing, plugging and inching

3 phase, 3 pole	220 V – 240 V	0.37 kW
	380 V – 440 V	0.55 kW
1 phase, 2 pole	110 V – 120 V	0.15 kW
	220 V – 240 V	0.25 kW
	380 V – 440 V	0.50 kW

AC-23A Frequent switching of motors or other high inductive loads

3 phase, 3 pole	220 V – 240 V	1.80 kW
	380 V – 440 V	3.00 kW
1 phase, 2 pole	110 V – 120 V	0.37 kW
	220 V – 240 V	0.75 kW
	380 V – 440 V	1.10 kW

Overvoltage category
III, valid for lines with grounded common neutral termination

Degree of pollution
3, valid for lines with grounded common neutral termination

Electrical characteristics for AC (UL/Canada)

Rated operational voltage
300 V

Rated Insulation Voltage U_i
300 V

Rated Thermal Current
10 A

Ampere Rating
Resisitve or low inductive loads, for switching of power > 1 kW, 10 A

Ratings
Standard motor load, DOL Rating (similar AC-3)

3 phase, 3 pole	110 V – 120 V	0.75 HP
	220 V – 240 V	1.00 HP
1 phase, 2 pole	110 V – 120 V	0.33 HP
	220 V – 240 V	0.75 HP
	277 V – 277 V	0.75 HP

Pilot Duty, Heavy
300 VAC

Electrical characteristics for DC

Switching voltage and switching current DC

Resistive loads T ≤ 1 ms

Number of series contact(s)							Switch
1	2	3	4	5	6	8	capacity
24 V	48 V	70 V	95 V	120 V	145 V	190 V	10.0 A
48 V	95 V	140 V	190 V	240 V	290 V	350 V	6.0 A
60 V	120 V	180 V	240 V	300 V	360 V	450 V	2.5 A
110 V	220 V	330 V	440 V	550 V	660 V		0.7 A
220 V	440 V	660 V					0.3 A
440 V	660 V						0.2 A

Inductive loads T = 50 ms

Number of series contact(s)							Switch
1	2	3	4	5	6	8	capacity
24 V	48 V	70 V	95 V	120 V	145 V	190 V	6.0 A
30 V	60 V	90 V	120 V	150 V	180 V	240 V	3.0 A
48 V	95 V	140 V	190 V	240 V	290 V	350 V	1.0 A
60 V	120 V	180 V	240 V	300 V	360 V	450 V	0.7 A
110 V	220 V	330 V	440 V	550 V	660 V		0.3 A

Ambient conditions

Operating temperature

Ambient Temperatures of Stages

open at 100 % I_u / I_{th} 55 °C during 24 h with peaks up to 60 °C

enclosed at 100 % I_{the} 35 °C during 24 h with peaks up to 40 °C

Santon rotary selector switching element

Mechanical characteristics

Terminals

Screw terminals

Terminal lead material copper wires only
Max. wire gauge:
Single or multi-wire 2 x 1.5 mm² (2 x AWG 12)
Fine wire 2 x 1.5 mm² (2 x AWG 12)
Min. wire gauge:
Single or multi-wire 2 x 0.5 mm² (2 x AWG 20)
Fine wire 2 x 0.5 mm² (2 x AWG 20)

Tightening torque

For fixing nuts max. 0.5 Nm

Number of stages

1 to 8 stages max.

Number of contacts

1 to 16 closing contacts
(contacts positioning according to wiring diagram)

Switching angle

Basic position of switching position “A” is 9 o’clock

Maintained action switching angle
12 max. 30°
8 max. 45°
6 max. 60°
4 max. 90°

Momentary action with release 30°

Standard type of Santon

F1V Hard Silver contacts Gold plated

Electrical Characteristics

Minimum Voltage

20V

Rated Impulse Withstand Voltage U_{imp}

4KV

Short Circuit Protection

Max. fuse size (gL-characteristics)
25 KA = > 16A
10 KA = > 20A
Rated short-time withstand current (1s-current) 250 A

Electrical Characteristics for AC

Standards

The devices comply with: IEC 60947, IEC 60204, DIN EN 61058, UL508, C22.2 No.14

Rated Operational Voltage U_e

480 V

Rated Insulation Voltage U_i

480 V

Rated Operational Current I_e

AC-15 switching of control devices, contractors, valves, etc.
220 V – 230 V 8 A
380 V – 440 V 6 A

AC-20 A no load operation
20 A

04 Technical data

AC-21A Switching of resistive loads, including moderate overloads for switching of power > 1 kW
20 A

AC-23 Switching of motors or other high-inductive loads

3-phase, 3-pole	220 V – 230 V	5,00 kW
	380 V – 440 V	7,50 kW
1-phase, 2-pole	220 V – 230 V	2,50 kW
	380 V – 440 V	3,70 kW

Related Utilization Category
AC-3 Direct starting of squirrel-cage induction motors, switching off during the starting, star-delta starting

3-phasig, 3-polig	220 V – 240 V	3,00 kW
	380 V – 440 V	5,00 kW
1-phasig, 2-polig	220 V – 230 V	2,20 kW
	380 V – 440 V	3,00 kW

Degree of pollution
3, valid for lines with grounded common neutral termination

Electrical characteristics for AC (UL/Canada)

Rated operational voltage
300 V

Rated Insulation Voltage U_i
300 V

Rated Thermal Current
15 A

Ampere Rating
Resistive or low inductive loads, for switching of power > 1 kW, 15 A

Ratings
Standard motor load, DOL Rating (similar to AC-3)

3-phase, 3-pole	220 V – 240 V	3.00 HP

Electrical characteristics for DC

Switching voltage and switching current DC
Resistive loads T ≤ 1 ms DC 21

Number of series contact(s)

1	2	5	8	Switch capacity
24 V	110 V	220 V	440 V	20.0 A
48 V				20.0 A
60 V				20.0 A
110 V				4.0 A
220 V				0.7 A
440 V				0.25 A

Inductive Loads T = 50 ms DC13

Number of series contact(s)

1	2	3	6	8	Switch capacity
24 V	48 V	60 V	110 V	220 V	20.0 A
48 V					16.0 A
60 V					12.0 A
110 V					1.0 A
220 V					0.4 A
440 V					0.15 A

Ambient conditions

Operating Temperature
Ambient Temperature of Stages
−25 °C … +55 °C

Shock resistance
(single impact, semi-sinusoidal)
300 m/s² pulse width 11 ms, as per DIN EN 600068-2-27

Fire Protection norms
EN 45545

Flasher

Material

Housing
Plastic, in accordance with UL 94 V0

Mechanical characteristics

Terminals
Screw terminal

Electrical characteristics

Flasher frequency
1.5 Hz

Relative duty factor
Approx. 50 %

Ambient conditions

Operating temperature
0° … +50 °C

Protection degree
Rear side IP30

EAO reserves the right to alter specifications without further notice.

04 Marking

General notes

1. Engraving
In addition to the most commonly used world languages, in DIN1451-3 close spacing, other typefaces are available as Scandinavian, Slavic, Greek, Russian and Polish. Red, blue and black lenses are filled with white colour. Other colour lenses are filled in black. Standard height of letters is 3 mm. If the height is not specified, we will supply 3 mm engraved letters.

2. Hot stamping
For larger series it is worth considering markings by means of hot stamping. We will pleased to advise you. For letters and figures, typefaces with 2.5 mm, 3 mm and 4 mm are available.

3. Film inserts
Instead of using engraving the square lenses can be fitted with film inserts, as an alternative. Film thickness is 0.25 mm. Max. film size: for Indicator 24.5 x 24.5 mm, for illuminated pushbutton 21.5 x 21.5 mm.

Engraving marking cap for Indicator round, full face illumination

All dimensions in mm

Height of text cap	Height of letters h	Number of lines	Number of capital letters per line (guide value)	Number of lowercase letters per line (guide value)	Picture
Text cap (Ø 23)	3	3	8-9	9-10	B1
	4	3	5-7	6-8	B1
	8	3	–	–	B1
	3	2	8	9	B2
	4	2	5	6	B2
	8	2	2	2	B2
	3	1	9	10	B3
	4	1	7	8	B3
	8	1	3	3-4	B3

B1 B2 B3

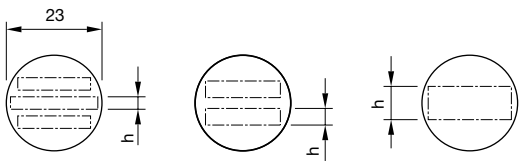

The gap between two words results in each case a letter less.

Engraving marking plate for Indicator and illuminated Pushbutton round, front illumination

All dimensions in mm

Height of marking plate	Height of letters h	Number of lines	Number of capital letters per line (guide value)	Number of lowercase letters per line (guide value)	Picture
Marking plate (Ø 20)	3	3	6-8	7+9	B1
	4	3	5-6	6-7	B1
	8	3	–	–	B1
	3	2	6	7	B2
	4	2	5	6	B2
	8	2	1	2	B2
	3	1	8	9	B3
	4	1	6	7	B3
	8	1	3	3	B3

B1 B2 B3

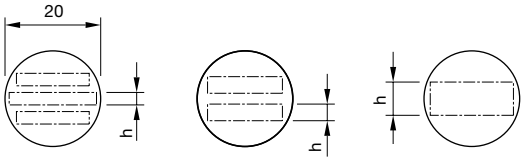

The gap between two words results in each case a letter less.

Engraving diffusor cap for Indicator square, full face illumination

All dimensions in mm

Height of letters h	Number of lines	Number of capital letters per line (guide value)	Number of lowercase letters per line (guide value)
2.5	6	12	13
3.0	5	10	11
4.0	4	7	8
5.0	3	6	7
6.0	3	5	5-6
8.0	2	4	4–5

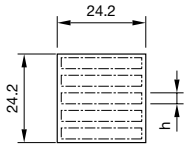

The gap between two words results in each case a letter less.

04 Marking

Engraving lens holder for Indicator and Illuminate Pushbutton square, front illumination

All dimensions in mm

Height of letters h	Number of lines	Number of capital letters per line (guide value)	Number of lowercase letters per line (guide value)
2.5	5	10	11
3.0	5	9	9-10
4.0	4	6	7
5.0	3	5	6
6.0	1	4	4-5
8.0	2	2-3	3

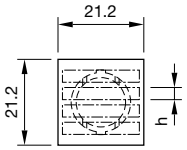

The gap between two words results in each case a letter less.

Important: Consider lens holder mounting orientation before specifying engraving charachters!

Engraving legend plates

All dimensions in mm

Dimension	Devices mounting style	Height of letters h	Number of lines	Number of capital letters per line (guide value)	Number of lowercase letters per line (guide value)	Picture
30 x 50	round, raised	3	2	10	11	B1
		4	1	7	8	B1
		8	1	3	4	B1
35 x 57.5	round, flush	3	2	10	11	B2
		4	1	7	8	B2
		8	1	3	4	B2
18 x 35	square, flush	3	3	15	16	B3
		4	2	10	12	B3

B1

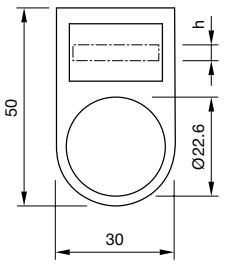

B2

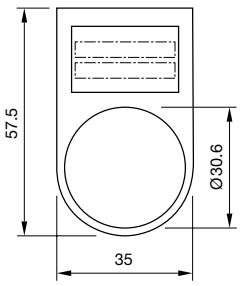

B3

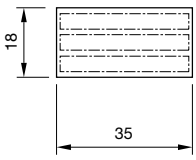

The gap between two words results in each case a letter less.

Standard texts for marking plates and marking caps for Indicator and Illuminated Pushbutton

Height of letters 6 mm

I Part No. 704.609.912001	II Part No. 704.609.912002	III Part No. 704.609.912003	O Part No. 704.609.912004
EIN Part No. 704.609.912005	AUS Part No. 704.609.912006	AUF Part No. 704.609.912007	AB Part No. 704.609.912008
START Part No. 704.609.912009	STOP Part No. 704.609.912010	HAND Part No. 704.609.912011	AUTO Part No. 704.609.912012
ZU Part No. 704.609.912013	ON Part No. 704.609.912014	OFF Part No. 704.609.912015	ARRET Part No. 704.609.912016
MARCHE Part No. 704.609.912017	RESET Part No. 704.609.912018		

04 Marking

Symbols for marking plates and marking caps for Indicator and Illuminated Pushbutton

All marking plates with the printed article-numbers are available for flat lenses, marking cap only on request.

Part No. 704.609.910001 Direction of linear rectilinear motion (also for → ↓↑)	Part No. 704.609.910002 Linear motion in 2 directions (also for ↕)	Part No. 704.609.910004 Limited linear motion (also for ← ↑↓)	Part No. 704.609.910007 Direction of continuous rotation (right)
Part No. 704.609.9100071 Direction of continuous rotation (left)	Part No. 704.609.910008 Rotation in 2 directions	Part No. 704.609.910009 Direction of interrupted rotation (right)	Part No. 704.609.910010 Limited rotation (right)
Part No. 704.609.9100101 Limited rotation (left)	Part No. 704.609.910013 Direction of spindle rotation	Part No. 704.609.910026 Rapid traverse	Part No. 704.609.910028 Increase of value (speed, for instance)
Part No. 704.609.910029 Decrease of value (speed, for instance)	Part No. 704.609.910041 Electric motor	Part No. 704.609.910048 Pump (general symbol)	Part No. 704.609.9100631 Lock or tighten
Part No. 704.609.9100632 Lock or tighten	Part No. 704.609.9100641 Unlock, unclamp	Part No. 704.609.9100642 Unlock, unclamp	Part No. 704.609.910065 Brake on
Part No. 704.609.910066 Brake off	Part No. 704.609.910067 Automatic (or semi-automatic) cycle	Part No. 704.609.910068 Hand control	Part No. 704.609.910069 Start, on
Part No. 704.609.910070 Stop, off	Part No. 704.609.910071 Start and stop with same button	Part No. 704.609.910072 In action as long as button is operated	Part No. 704.609.910074 Engaging (mechanical start)
Part No. 704.609.910075 Disengaging (mechanical stop)	Part No. 704.609.910092 Danger (high voltage)!	Part No. 704.609.910093 Caution!	Part No. 704.609.910101 Coolant fluid
Part No. 704.609.910102 Machine lighting	Part No. 704.609.910108 Blast		

Terminal Markings

We supply the switch elements with terminal marking labels inserted, the figures always being visible for the first element (immediately following the actuator). Therefore, when two switch elements are used, these inserts have to be turned for the second element. Then the numbers appear as described under III.

If more than two switch elements are used, this should be noted on your order, in order that we may insert and deliver the marking labels accordingly.

I. Consecutive numbering of switch systems
(2 per switch element)

First switch element

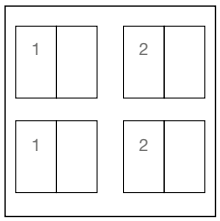

Second switch element

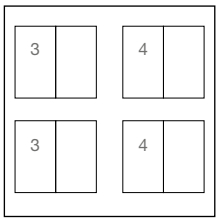

When more than 2 switch elements are used, the numbering is sequenced accordingly (5, 6 etc.).

II. Marking of normally closed contact, normally open contact and their combinations

Normally closed (1–2)

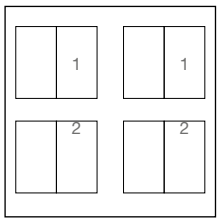

Normally open (3–4)

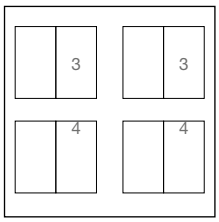

Normally closed/open

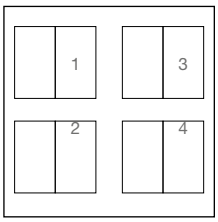

III. Example of the correct insertion of the labels for 2 switch elements with normally open contacts

First switch element

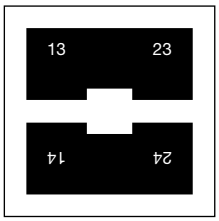

Second switch element

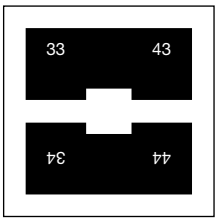

Labels for normally closed and normally closed/normally open contacts should be inserted accordingly.

Suppressor circuits

When switching inductive loads such as relays, DC motors, and DC solenoids, it is always important to absorb surges (e. g. with a diode) to protect the contacts. When these inductive loads are switched off, a counter emf can severely damage switch contacts and greatly shorten lifetime.

Fig. 1 shows an inductive load with a free-wheeling diode connected in parallel. This free-wheeling diode provides a path for the inductor current to flow when the current is interrupted by the switch. Without this free-wheeling diode, the voltage across the coil will be limited only by dielectric breakdown voltages of the circuit or parasitic elements of the coil. This voltage can be kilovolts in amplitude even when nominal circuit voltages are low (e. g. 12 VDC) see Fig. 2.

The free-wheeling diode should be chosen so that the reverse breakdown voltage is greater than the voltage driving the inductive load. The DC blocking voltage (VR) of the free-wheeling diode can be found in the datasheet of a diode. The forward current should be equal or greater than the maximum current flowing through the load.

To get an efficient protection, the free-wheeling diode must be connected as close as possible to the inductive load!

Switching with inductive load
Fig. 1

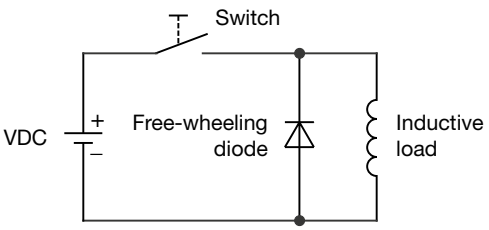

Counter EMF
over load without free-wheeling diode
Fig. 2

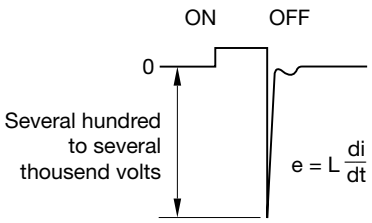

Rating data

The following guidelines apply when connecting the Series 04 buttons.

Buttons not illuminable or illuminable with 1 - 3 slow-make switching elements or snap-action switching elements and front panel made of plastic or metal

- Pushbutton
- Illuminated pushbutton
- Mushroom-head pushbutton
- Selector switch
- Keylock switch
- Stop switch
- Emergency stop switch

Rating values for enclosure class 1 (simple insulation)

Overvoltage category	III
Rated impulse withstand voltage	4 kV
Max. rated insulation voltage Ui	500 V
Pollution degree	3

Rated values for enclosure class 2 (double insulation)

Overvoltage category	III
Rated impulse withstand voltage	4 kV
Max. rated insulation voltage Ui	250 V
Pollution degree	3

Restrictions

- Metal front panel must be earthed
- Notes in the data sheet and on the switching element must be observed

The following guidelines apply when connecting the Series 04 buttons.

Buttons not illuminable or illuminable with 1 - 3 slow-make switching elements or snap-action switching elements and front panel made of plastic or metal

- Key-insert switch

Rating values for enclosure class 1 (simple insulation)

Overvoltage category	III
Rated impulse withstand voltage	4 kV
Max. rated insulation voltage Ui	500 V
Pollution degree	3

Rated values for enclosure class 2 (double insulation)

Overvoltage category	III
Rated impulse withstand voltage	4 kV
Max. rated insulation voltage Ui	250 V
Pollution degree	3

Restrictions

- Metal front panel must be earthed
- Notes in the data sheet and on the switching element must be observed

Conductor switch with 1 - 3 slow-make switching elements or snap-action switching elements and front plate made of plastic or metal

- Conductor switch

Rating values for enclosure class 1 (simple insulation)

Overvoltage category	III
Rated impulse withstand voltage	4 kV
Max. rated insulation voltage Ui	400 V
Pollution degree	3

Rated values for enclosure class 2 (double insulation)

Overvoltage category	III
Rated impulse withstand voltage	4 kV
Max. rated insulation voltage Ui	200 V
Pollution degree	3

Restrictions

- Metal front panel must be earthedv
- Conductor switch must be earthed
- Notes in the data sheet and on the switching element must be observed