Series 84

Attractive. Versatile and functional.

https://eao.com/84

84

Key advantages

- Attractive design and reliable operation
- IP40, IP65, IP67 front protection
- Powerful, consistent illumination with innovative technologies
- Animated illumination options for a wide variety of potential applications
- Available with soldered, plug, PCB and flat ribbon cable terminals
- Freely configurable HMIs with IO-Link interface (Industry 4.0)

Typical application areas

- Machinery
- Measurement and control engineering
- Lifting and handling equipment
- Process automation
- Special vehicles
- Ticketing machines
- Medical equipment
- Food industry

Functions

- Pushbutton
- Illuminated pushbutton
- Indicator
- Capacitive buttons with IO-Link configurability

Design

- Flush
- Raised

IP front protection

- IP40
- IP65
- IP67
- IP69K

Ratings

- 42 VAC (100 mA)
- 240 VAC (1.5 A)
- 8.4 ... 32V (200 mA) electronic switching element

Mounting cut-outs

- Ø 22.3 mm
- Ø 22.5 mm
- Ø 30.5 mm

Terminal

- Soldering/plug-in terminal
- PCB
- Cable
- M12

Lens Material

- Aluminium
- Plastic
- Stainless steel

Markings

- Engraving
- Laser marking
- Hot stamping
- Pad printing
- Screen print
- Milling
- Illuminated Symbols

Approvals

- CB (IEC 60947)
- UL
- TSI PRM
- CSA
- EHEDG
- FDH Compliant
- CQC

Conformities

- CE
- UKCA
- 2006/42/EC (MD)
- 2011/65/EC (RoHS)
- 1300/2014 (PRM)
- 2014/30/EU (EMC)

Content 84

Flush design	
Pushbutton standard	4
Pushbutton PCB standard	6
Pushbutton ring illumination standard	8
Pushbutton ring illumination PCB standard	9
Pushbutton ring illumination PCB	10
Illuminated pushbutton standard	11
Illuminated pushbutton PCB standard	13
Indicator standard	15
Indicator PCB standard	16
Indicator ring illumination standard	17
Indicator ring illumination PCB standard	18
Indicator ring illumination PCB	19
Capacitive sensor switch with IO-Link Standard	20
Capacitive sensor switch with IO-Link Stainless Steel	22
Capacitive sensor switch with IO-Link Hygiene	24
Raised design	
Stop switch	26
Emergency stop switch	29
Emergency stop switch, Bi-Colour	32
USB socket	34
Components	**35**
Accessories	**49**
Technical data	**57**
Application guidelines	**62**

84 Flush design

Pushbutton standard, IP40, IP65, IP67

Product can differ from the current configuration.

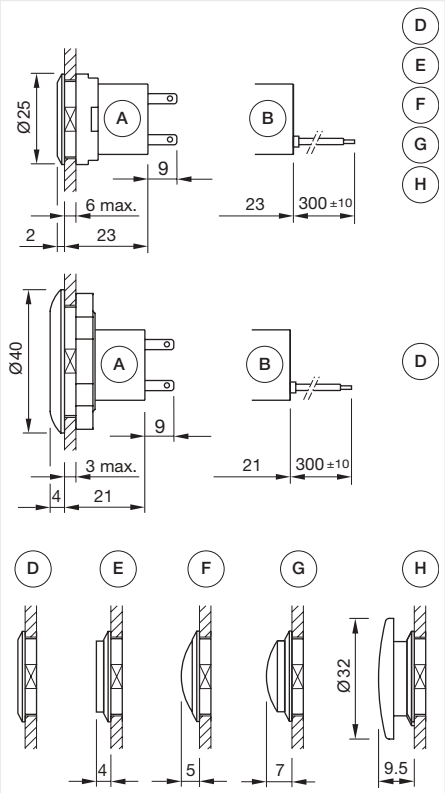

Dimensions [mm]
A = Plug-in terminal 2.8 mm x 0.5 mm
B = Flat ribbon cable
D = Lens level with bezel
E = Lens raised above bezel
F = Lens konvexe level with bezel
G =Lens convexe raised above bezel
H = Mushroom-head cap

Equipment consisting of (schematic overview)

Lens Page 35

Actuator

Fixing nut

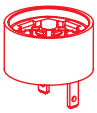

Switching element Page 40

Each Part Number listed below includes all the black components shown in the 3D-drawing.

To obtain a complete unit, please select the red components from the pages shown.

General information

- Non-illuminated lens and bezel
- The colour of anodised aluminium parts can vary due to technical production reasons

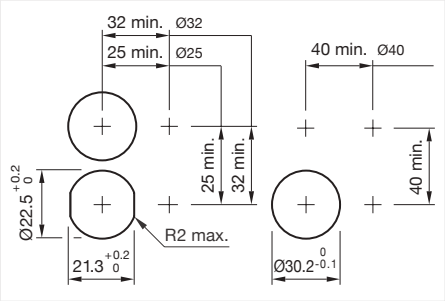

Mounting cut-outs [mm]

Actuator, Front dimension

Switching action	Front bezel colour	Front bezel material	IP front protection	Dimension	Part No.	Wiring diagram
Momentary	Black	Plastic	IP65, IP67	Ø 25 mm	84-1101.0	72
	Black	Aluminium	IP65, IP67	Ø 25 mm	84-1201.0	72
	Red	Aluminium	IP65, IP67	Ø 25 mm	84-1201.2	72
	Gold	Aluminium	IP65, IP67	Ø 25 mm	84-1201.4	72
	Olive	Aluminium	IP65, IP67	Ø 25 mm	84-1201.5	72
	Blue	Aluminium	IP65, IP67	Ø 25 mm	84-1201.6	72
	Nature	Aluminium	IP65, IP67	Ø 25 mm	84-1201.7	72
	Black	Plastic	IP40	Ø 25 mm	84-2101.0	294

Actuator, Front dimension

Switching action	Front bezel colour	Front bezel material	IP front protection	Dimension	Part No.	Wiring diagram
Momentary	Nature	Aluminium	IP65, IP67	Ø 40 mm	84-1221.7	294

Wiring diagrams

Wiring diagram 72

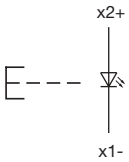

Wiring diagram 294

84 Flush design

Pushbutton PCB standard, IP40, IP65, IP67

Product can differ from the current configuration.

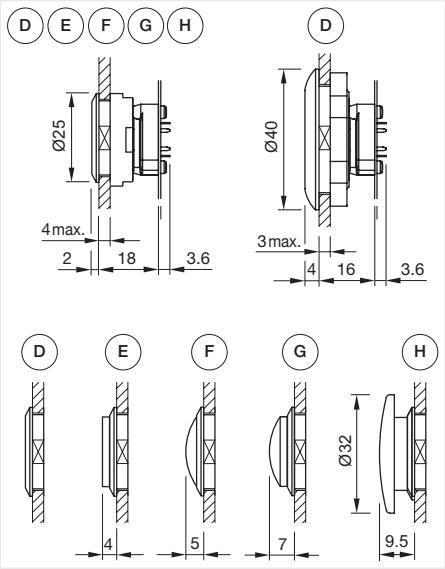

Dimensions [mm]
D = Lens level with bezel
E = Lens raised above bezel
F = Lens konvexe level with bezel
G = Lens convexe raised above bezel
H = Mushroom-head cap

Equipment consisting of (schematic overview)

Lens	Page 35
Actuator	
Fixing nut	
Mounting flange	Page 48
Switching element	Page 40

Each Part Number listed below includes all the black components shown in the 3D-drawing.

To obtain a complete unit, please select the red components from the pages shown.

General information

- Non-illuminated lens and bezel
- The colour of anodised aluminium parts can vary due to technical production reasons

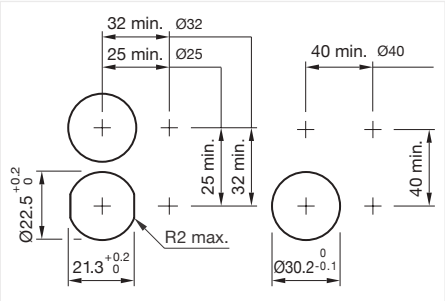

Mounting cut-outs [mm]

Actuator, Front dimension

Switching action	Front bezel colour	Front bezel material	IP front protection	Dimension	Part No.	Wiring diagram
Momentary	Black	Plastic	IP65, IP67	Ø 25 mm	84-1101.0	72
	Black	Aluminium	IP65, IP67	Ø 25 mm	84-1201.0	72
	Red	Aluminium	IP65, IP67	Ø 25 mm	84-1201.2	72
	Gold	Aluminium	IP65, IP67	Ø 25 mm	84-1201.4	72
	Olive	Aluminium	IP65, IP67	Ø 25 mm	84-1201.5	72
	Blue	Aluminium	IP65, IP67	Ø 25 mm	84-1201.6	72
	Nature	Aluminium	IP65, IP67	Ø 25 mm	84-1201.7	72
	Black	Plastic	IP40	Ø 25 mm	84-2101.0	294

Actuator, Front dimension

Switching action	Front bezel colour	Front bezel material	IP front protection	Dimension	Part No.	Wiring diagram
Momentary	Nature	Aluminium	IP65, IP67	Ø 40 mm	84-1221.7	294

Wiring diagrams

Wiring diagram 72	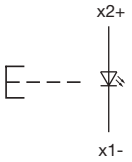 Wiring diagram 294

84 Flush design

Pushbutton ring illumination standard, IP65, IP67

Product can differ from the current configuration.

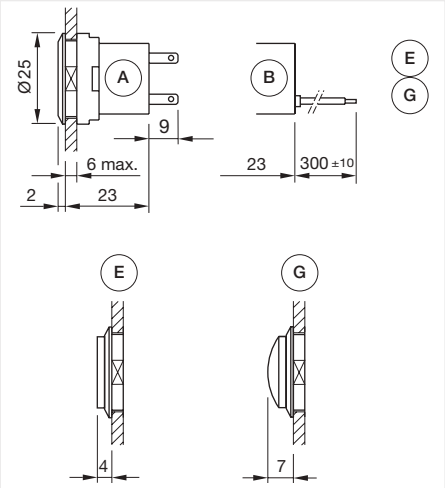

Dimensions [mm]
A = Plug-in terminal 2.8 mm x 0.8 mm
B = Flat ribbon cable
E = Lens raised above bezel
G = Lens convexe raised above bezel

Equipment consisting of (schematic overview)

Lens Page 35

Actuator

Fixing nut

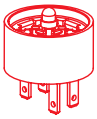

Switching element Page 40

Each Part Number listed below includes all the black components shown in the 3D-drawing.

To obtain a complete unit, please select the red components from the pages shown.

General information

- Front bezel illuminated
- Accessories for halo illumination: Essential lenses Part No. 84-7202.x00A and 84-7205.x00A

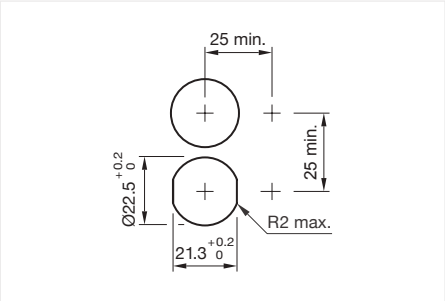

Mounting cut-outs [mm]

Actuator, Front dimension Ø 25 mm

Switching action	Front bezel colour	Front bezel material	IP front protection	Front bezel optics	Part No.	Wiring diagram
Momentary	White	Plastic	IP65, IP67	translucent	84-1091.7	294

Wiring diagrams

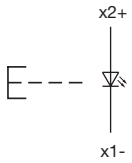

Wiring diagram 294

Pushbutton ring illumination PCB standard, IP65, IP67

Equipment consisting of (schematic overview)

Lens	Page 35
Actuator	
Fixing nut	
Mounting flange	Page 48
Single-LED	Page 39
Switching element	Page 40

Each Part Number listed below includes all the black components shown in the 3D-drawing.

To obtain a complete unit, please select the red components from the pages shown.

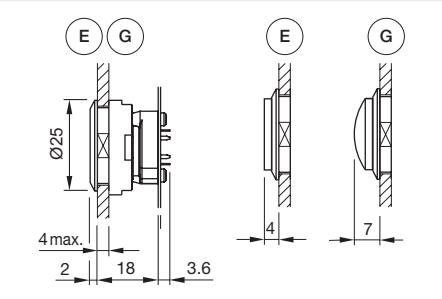

Dimensions [mm]
E = Lens raised above bezel
G = Lens convexe raised above bezel

Product can differ from the current configuration.

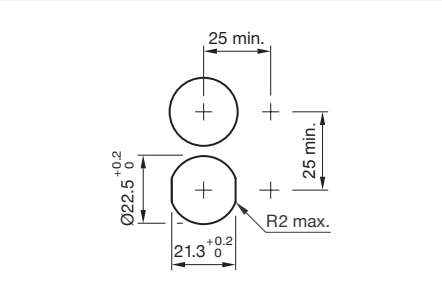

Mounting cut-outs [mm]

General information

- Front bezel illuminated
- Accessories for halo illumination: Essential lenses Part No. 84-7202.x00A and 84-7205.x00A

Actuator, Front dimension Ø 25 mm

Switching action	Front bezel colour	Front bezel material	IP front protection	Front bezel optics	Part No.	Wiring diagram
Momentary	White	Plastic	IP65, IP67	translucent	84-1091.7	294

Wiring diagrams

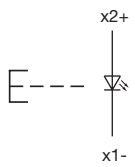

Wiring diagram 294

84 Flush design

Pushbutton ring illumination PCB, IP65, IP67

Product can differ from the current configuration.

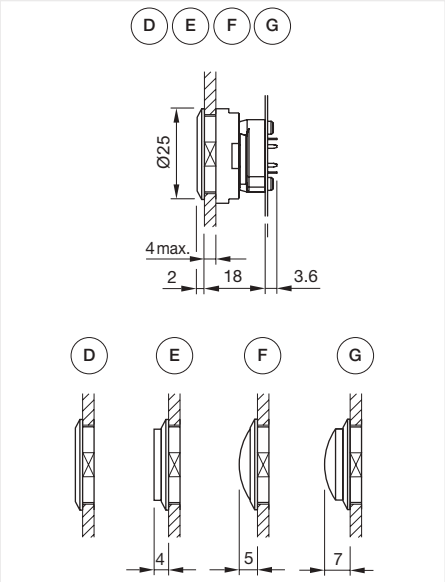

Dimensions [mm]
D = Lens level with bezel
E = Lens raised above bezel
F = Lens konvexe level with bezel
G = Lens convexe raised above bezel

Equipment consisting of (schematic overview)

	Lens	Page 35
	Actuator	
	Fixing nut	
	Mounting flange	Page 48
	Single-LED	Page 39
	Switching element	Page 40

Each Part Number listed below includes all the black components shown in the 3D-drawing.

To obtain a complete unit, please select the red components from the pages shown.

General information

- The mini TOP LEDs are not part of delivery. Recommendation: Osram Hyper Mini TOP LED

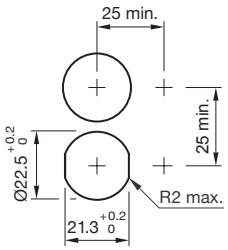

Mounting cut-outs [mm]

Actuator, Front dimension Ø 25 mm

Switching action	Front bezel colour	Front bezel material	IP front protection	Front bezel optics	Part No.	Wiring diagram
Momentary	Colourless	Plastic	IP65, IP67	transparent	84-1081.7	294

Wiring diagrams

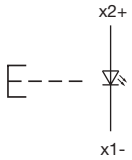

Wiring diagram 294

Illuminated pushbutton standard, IP40, IP65, IP67

Equipment consisting of (schematic overview)

Lens Page 35

Actuator

Fixing nut

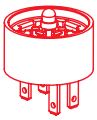
Switching element Page 40

Each Part Number listed below includes all the black components shown in the 3D-drawing.

To obtain a complete unit, please select the red components from the pages shown.

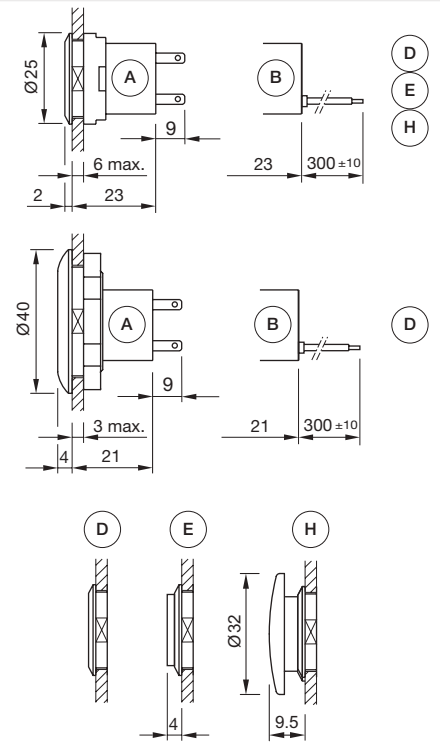

Dimensions [mm]
A = Plug-in terminal 2.8 mm x 0.8 mm
B = Flat ribbon cable
D = Lens level with bezel
E = Lens raised above bezel
H = Mushroom-head cap

Product can differ from the current configuration.

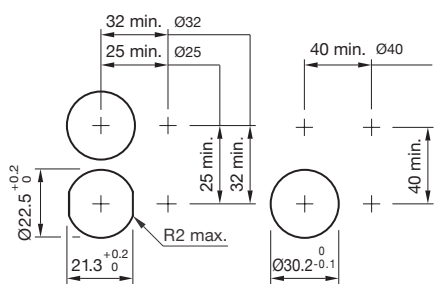

Mounting cut-outs [mm]

General information

- Illuminated lens, non-illuminated bezel
- The colour of anodised aluminium parts can vary due to technical production reasons

Actuator, Front dimension

Switching action	Front bezel colour	Front bezel material	IP front protection	Dimension	Part No.	Wiring diagram
Momentary	Black	Plastic	IP65, IP67	Ø 25 mm	84-1101.0	72
	Black	Aluminium	IP65, IP67	Ø 25 mm	84-1201.0	72
	Red	Aluminium	IP65, IP67	Ø 25 mm	84-1201.2	72
	Gold	Aluminium	IP65, IP67	Ø 25 mm	84-1201.4	72
	Olive	Aluminium	IP65, IP67	Ø 25 mm	84-1201.5	72
	Blue	Aluminium	IP65, IP67	Ø 25 mm	84-1201.6	72
	Nature	Aluminium	IP65, IP67	Ø 25 mm	84-1201.7	72
	Black	Plastic	IP40	Ø 25 mm	84-2101.0	294

84 Flush design

Actuator, Front dimension

Switching action	Front bezel colour	Front bezel material	IP front protection	Dimension	Part No.	Wiring diagram
Momentary	Nature	Aluminium	IP65, IP67	Ø 40 mm	84-1221.7	294

Wiring diagrams

Wiring diagram 72

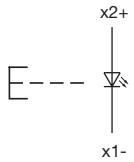

Wiring diagram 294

Illuminated pushbutton PCB standard, IP40, IP65, IP67

Equipment consisting of (schematic overview)

Lens	Page 35
Actuator	
Fixing nut	
Mounting flange	Page 48
Single-LED	Page 39
Switching element	Page 40

Each Part Number listed below includes all the black components shown in the 3D-drawing.

To obtain a complete unit, please select the red components from the pages shown.

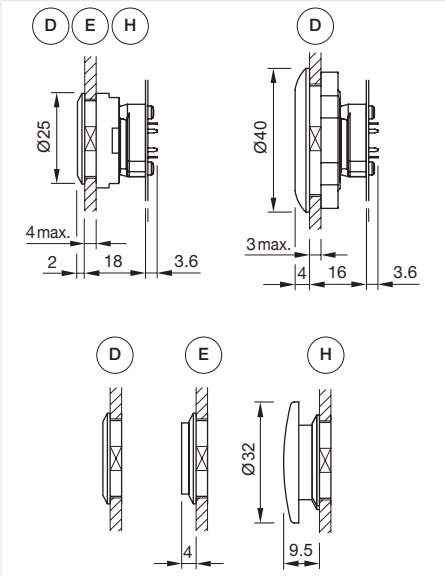

Dimensions [mm]
A = Lens level with bezel
E = Lens raised above bezel
H = Mushroom-head cap

Product can differ from the current configuration.

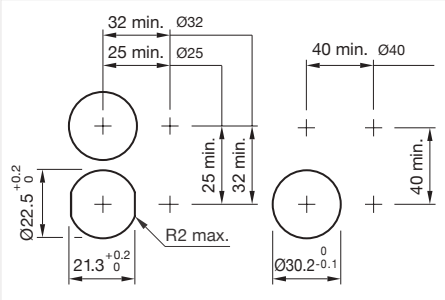

Mounting cut-outs [mm]

General information

- Illuminated lens, non-illuminated bezel
- The colour of anodised aluminium parts can vary due to technical production reasons

Actuator, Front dimension

Switching action	Front bezel colour	Front bezel material	IP front protection	Dimension	Part No.	Wiring diagram
Momentary	Black	Plastic	IP65, IP67	Ø 25 mm	84-1101.0	72
	Black	Aluminium	IP65, IP67	Ø 25 mm	84-1201.0	72
	Red	Aluminium	IP65, IP67	Ø 25 mm	84-1201.2	72
	Gold	Aluminium	IP65, IP67	Ø 25 mm	84-1201.4	72
	Olive	Aluminium	IP65, IP67	Ø 25 mm	84-1201.5	72
	Blue	Aluminium	IP65, IP67	Ø 25 mm	84-1201.6	72
	Nature	Aluminium	IP65, IP67	Ø 25 mm	84-1201.7	72
	Black	Plastic	IP40	Ø 25 mm	84-2101.0	294

Actuator, Front dimension

Switching action	Front bezel colour	Front bezel material	IP front protection	Dimension	Part No.	Wiring diagram
Momentary	Nature	Aluminium	IP65, IP67	Ø 40 mm	84-1221.7	294

84 Flush design

Wiring diagrams

Wiring diagram 72	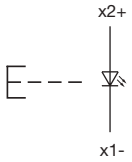 Wiring diagram 294

Indicator standard, IP40, IP65, IP67

Equipment consisting of (schematic overview)

Lens Page 35

Actuator

Fixing nut

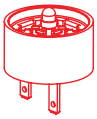

Illumination element Page 44

Each Part Number listed below includes all the black components shown in the 3D-drawing.

To obtain a complete unit, please select the red components from the pages shown.

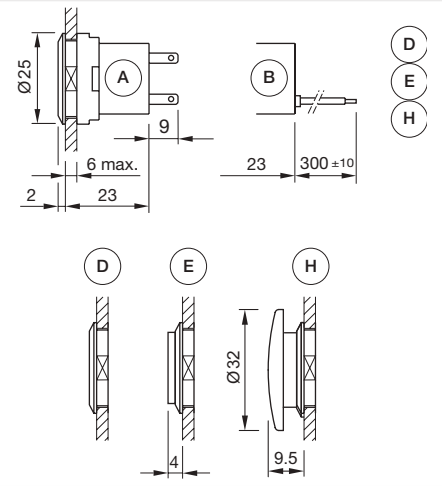

Dimensions [mm]
A = Plug-in terminal 2.8 mm x 0.8 mm
B = Flat ribbon cable
D = Lens level with bezel
E = Lens raised above bezel
H = Mushroom-head cap

Product can differ from the current configuration.

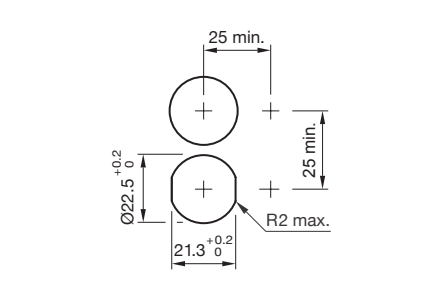

Mounting cut-outs [mm]

General information

- Illuminated lens, non-illuminated bezel
- The colour of anodised aluminium parts can vary due to technical production reasons

Actuator, Front dimension Ø 25 mm

IP front protection	Front bezel colour	Front bezel material	Part No.	Wiring diagram
IP65, IP67	Black	Plastic	84-0100.0	70
	Nature	Aluminium	84-0200.7	70
IP40	Black	Plastic	84-3100.0	70

Wiring diagrams

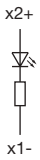

Wiring diagram 70

84 Flush design

Indicator PCB standard, IP40, IP65, IP67

Product can differ from the current configuration.

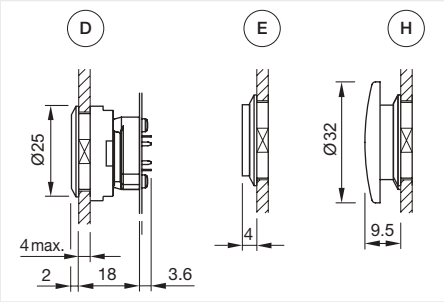

Dimensions [mm]
A = Lens level with bezel
E = Lens raised above bezel
H = Mushroom-head cap

General information

- Illuminated lens, non-illuminated bezel
- The colour of anodised aluminium parts can vary due to technical production reasons

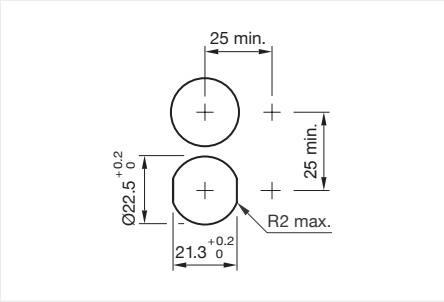

Mounting cut-outs [mm]

Equipment consisting of (schematic overview)

Lens Page 35

Actuator

Fixing nut

Mounting flange Page 48

Single-LED Page 39

Illumination element Page 44

Each Part Number listed below includes all the black components shown in the 3D-drawing.

To obtain a complete unit, please select the red components from the pages shown.

Actuator, Front dimension Ø 25 mm

IP front protection	Front bezel colour	Front bezel material	Part No.	Wiring diagram
IP67	Black	Plastic	84-0100.0	70
	Nature	Aluminium	84-0200.7	70
IP40	Black	Plastic	84-3100.0	70

Wiring diagrams

Wiring diagram 70

Indicator ring illumination standard, IP65, IP67

Equipment consisting of (schematic overview)

Lens — Page 35

Actuator

Fixing nut

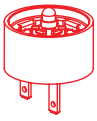

Illumination element — Page 44

Each Part Number listed below includes all the black components shown in the 3D-drawing.

To obtain a complete unit, please select the red components from the pages shown.

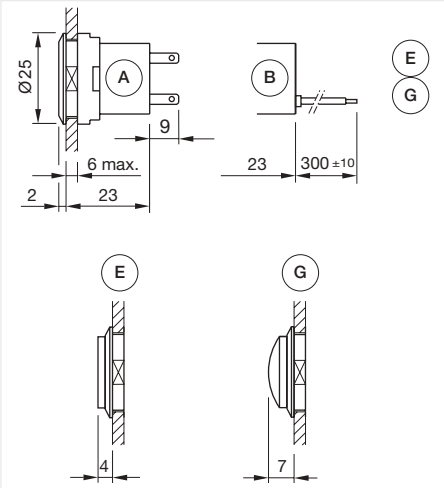

Dimensions [mm]
A = Plug-in terminal 2.8 mm x 0.8 mm
B = Flat ribbon cable
E = Lens raised above bezel
G = Lens convexe raised above bezel

Product can differ from the current configuration.

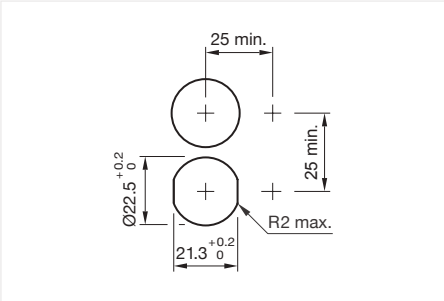

Mounting cut-outs [mm]

General information

- Front bezel illuminated

Actuator, Front dimension Ø 25 mm

IP front protection	Front bezel colour	Front bezel material	Front bezel optics	Part No.	Wiring diagram
IP65, IP67	Colourless	Plastic	translucent	84-0090.7	70

Wiring diagrams

Wiring diagram 70

84 Flush design

Indicator ring illumination PCB standard, IP65, IP67

Product can differ from the current configuration.

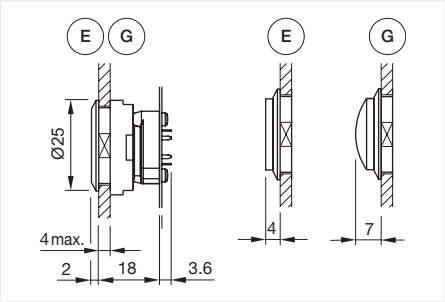

Dimensions [mm]
E = Lens raised above bezel
G = Lens convexe raised above bezel

General information

- Front bezel illuminated
- Accessories for halo illumination: Essential lenses Part No. 84-7202.x00A and 84-7205.x00A

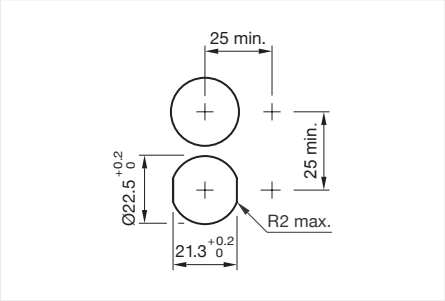

Mounting cut-outs [mm]

Equipment consisting of (schematic overview)

Lens Page 35

Actuator

Fixing nut

Mounting flange Page 48

Single-LED Page 39

Illumination element Page 44

Each Part Number listed below includes all the black components shown in the 3D-drawing.

To obtain a complete unit, please select the red components from the pages shown.

Actuator, Front dimension Ø 25 mm

IP front protection	Front bezel colour	Front bezel material	Front bezel optics	Part No.	Wiring diagram
IP65, IP67	Colourless	Plastic	translucent	84-0090.7	70

Wiring diagrams

Wiring diagram 70

Indicator ring illumination PCB, IP65, IP67

Equipment consisting of (schematic overview)

Lens — Page 35

Actuator

Fixing nut

Mounting flange — Page 48

Single-LED — Page 39

Illumination element — Page 44

Each Part Number listed below includes all the black components shown in the 3D-drawing.

To obtain a complete unit, please select the red components from the pages shown.

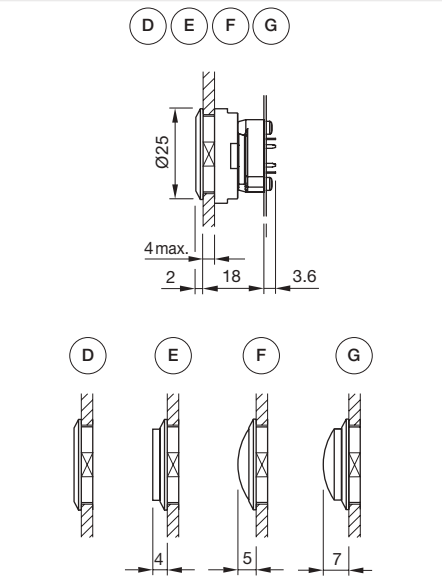

Dimensions [mm]
D = Lens level with bezel
E = Lens raised above bezel
F = Lens konvexe level with bezel
G = Lens convexe raised above bezel

Product can differ from the current configuration.

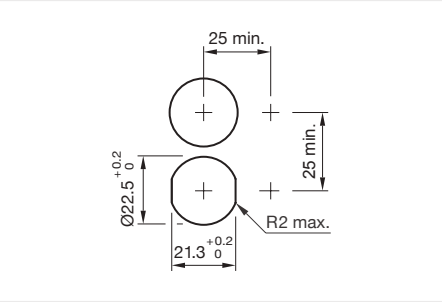

Mounting cut-outs [mm]

General information

- The mini TOP LEDs are not part of delivery. Recommendation: Osram Hyper Mini TOP LED

Actuator, Front dimension Ø 25 mm

IP front protection	Front bezel colour	Front bezel material	Front bezel optics	Part No.	Wiring diagram
IP65, IP67	Colourless	Plastic	transparent	84-0080.7	70

Wiring diagrams

Wiring diagram 70

84 Flush design

Capacitive sensor switch with IO-Link Standard, IP69K

Product can differ from the current configuration.

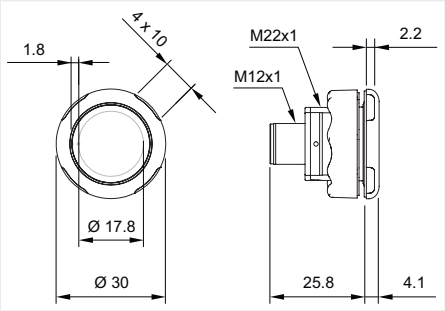

Dimensions [mm]

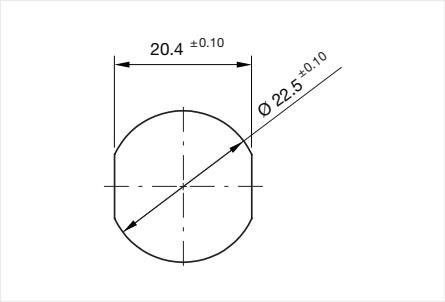

Mounting cut-outs [mm]

Equipment consisting of (schematic overview)

Actuator

Seal

Fixing nut

Each Part Number listed below includes all the black components shown in the 3D-drawing.

Capacitive sensor switch with IO-Link Standard

Front bezel material	Output	Output pulse	LED control	LED colour 1	LED colour 2	Symbol	Part No.
Plastic	PNP/NPN; NO/NC	Dynamic	Automatic	Green	Red	START (B10)	84-ASKS-B10-049C
	PNP/NPN; NO/NC	Dynamic	Automatic	Green	Red	STOP (B11)	84-ASKS-B11-049D
	PNP/NPN; NO/NC	Dynamic	Automatic	Green	Red	ON/OFF (B12)	84-ASKS-B12-049E
	PNP/NPN; NO/NC	Dynamic	Automatic	Green	Red	RESET (B13)	84-ASKS-B13-049F
	PNP/NPN; NO/NC	Dynamic	Automatic	Green	Red	Standby (B14)	84-ASKS-B14-04A0
	PNP/NPN; NO/NC	Dynamic	Automatic	Green	Red	arrows (B15)	84-ASKS-B15-04A1
	PNP/NPN; NO/NC	Dynamic	Automatic	Green	Red	START (C10)	84-ASKS-C10-04A2
	PNP/NPN; NO/NC	Dynamic	Automatic	Green	Red	STOP (C11)	84-ASKS-C11-04A3
	PNP/NPN; NO/NC	Dynamic	Automatic	Green	Red	ON/OFF (C12)	84-ASKS-C12-04A4
	PNP/NPN; NO/NC	Dynamic	Automatic	Green	Red	Standby (C14)	84-ASKS-C14-04A5
	PNP/NPN; NO/NC	Dynamic	Automatic	Green	Red	Standby (C16)	84-ASKS-C16-04A6
	PNP/NPN; NO/NC	Dynamic	Automatic	Green	Red	START (C17)	84-ASKS-C17-04A7
	PNP/NPN; NO/NC	Dynamic	Automatic	Green	Red	STOP (C18)	84-ASKS-C18-04A8
	PNP/NPN; NO/NC	Dynamic	Automatic	Green	Red	RESET (C19)	84-ASKS-C19-04A9
	PNP/NPN; NO/NC	Dynamic	Automatic	Green	Red	C20	84-ASKS-C20-049B

Wiring diagrams

3-pole

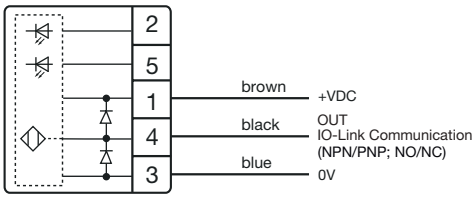

Wiring diagram

4-pole

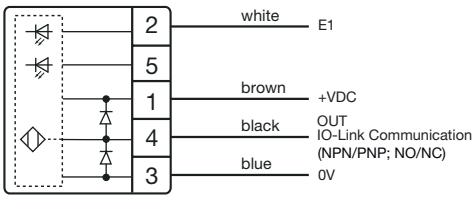

Wiring diagram

5-pole

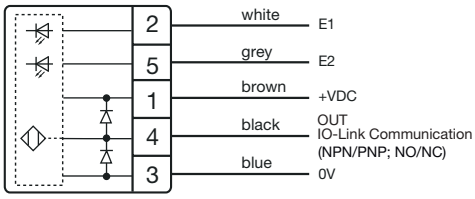

Wiring diagram

Component layouts

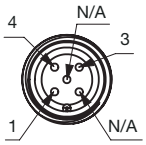

Component layout

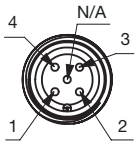

Component layout

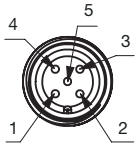

Component layout

84 Flush design

Capacitive sensor switch with IO-Link Stainless Steel, IP69K

Product can differ from the current configuration.

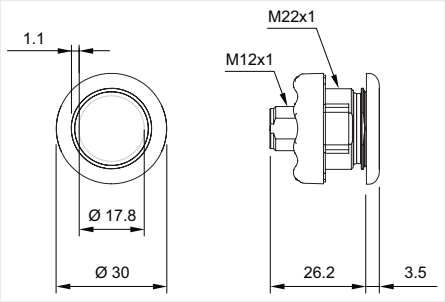

Dimensions [mm]

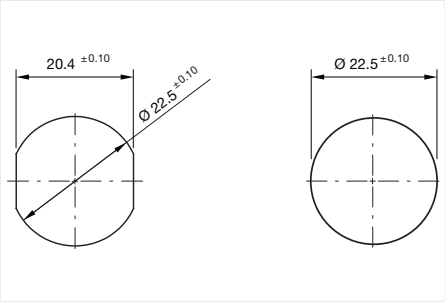

Mounting cut-outs [mm]

Equipment consisting of (schematic overview)

Actuator

Seal

Fixing nut

Each Part Number listed below includes all the black components shown in the 3D-drawing.

Capacitive sensor switch with IO-Link Stainless Steel

Front bezel material	Output	Output pulse	LED control	LED colour 1	LED colour 2	Symbol	Part No.
Stainless steel 316L	PNP/NPN; NO/NC	Dynamic	Automatic	Green	Red	START (B10)	84-ADKS-B10-04AA
	PNP/NPN; NO/NC	Dynamic	Automatic	Green	Red	STOP (B11)	84-ADKS-B11-04AB
	PNP/NPN; NO/NC	Dynamic	Automatic	Green	Red	ON/OFF (B12)	84-ADKS-B12-04AC
	PNP/NPN; NO/NC	Dynamic	Automatic	Green	Red	RESET (B13)	84-ADKS-B13-04AD
	PNP/NPN; NO/NC	Dynamic	Automatic	Green	Red	Standby (B14)	84-ADKS-B14-04AE
	PNP/NPN; NO/NC	Dynamic	Automatic	Green	Red	arrows (B15)	84-ADKS-B15-04AF
	PNP/NPN; NO/NC	Dynamic	Automatic	Green	Red	START (C10)	84-ADKS-C10-04B0
	PNP/NPN; NO/NC	Dynamic	Automatic	Green	Red	STOP (C11)	84-ADKS-C11-04B1
	PNP/NPN; NO/NC	Dynamic	Automatic	Green	Red	ON/OFF (C12)	84-ADKS-C12-04B2
	PNP/NPN; NO/NC	Dynamic	Automatic	Green	Red	Standby (C14)	84-ADKS-C14-04B3
	PNP/NPN; NO/NC	Dynamic	Automatic	Green	Red	START (B10)	84-ADKS-C16-04B4
	PNP/NPN; NO/NC	Dynamic	Automatic	Green	Red	START (C17)	84-ADKS-C17-04B5
	PNP/NPN; NO/NC	Dynamic	Automatic	Green	Red	STOP (C18)	84-ADKS-C18-04B6
	PNP/NPN; NO/NC	Dynamic	Automatic	Green	Red	RESET (C19)	84-ADKS-C19-04B7
	PNP/NPN; NO/NC	Dynamic	Automatic	Green	Red	C20	84-ADKS-C20-04B8

Wiring diagrams

3-pole

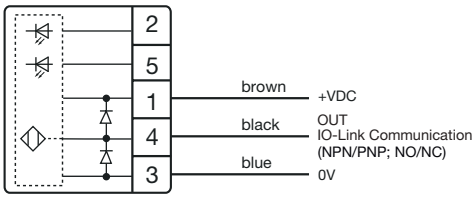

Wiring diagram

4-pole

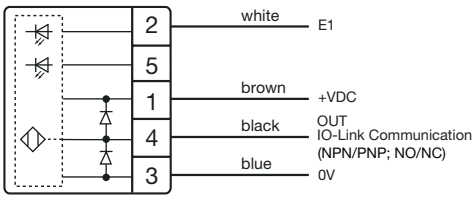

Wiring diagram

5-pole

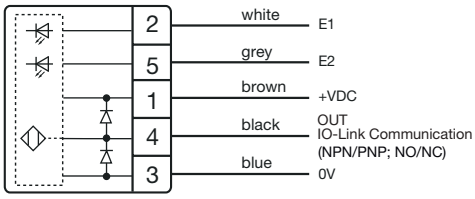

Wiring diagram

Component layouts

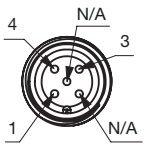

Component layout

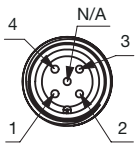

Component layout

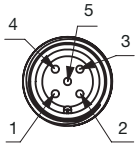

Component layout

84 Flush design

Capacitive sensor switch with IO-Link Hygiene, IP69K

Product can differ from the current configuration.

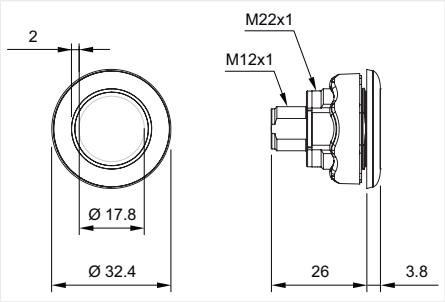

Dimensions [mm]

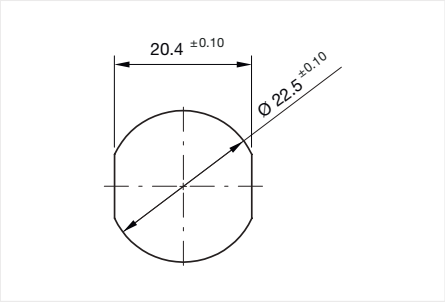

Mounting cut-outs [mm]

Equipment consisting of (schematic overview)

Actuator

Seal

Fixing nut

Each Part Number listed below includes all the black components shown in the 3D-drawing.

Capacitive sensor switch with IO-Link Hygiene

Front bezel material	Output	Output pulse	LED control	LED colour 1	LED colour 2	Symbol	Part No.
Stainless steel 316L	PNP/NPN; NO/NC	Dynamic	Automatic	Green	Red	START (B10)	84-ACKS-B10-04B9
	PNP/NPN; NO/NC	Dynamic	Automatic	Green	Red	STOP (B11)	84-ACKS-B11-04BA
	PNP/NPN; NO/NC	Dynamic	Automatic	Green	Red	ON/OFF (B12)	84-ACKS-B12-04BB
	PNP/NPN; NO/NC	Dynamic	Automatic	Green	Red	RESET (B13)	84-ACKS-B13-04BC
	PNP/NPN; NO/NC	Dynamic	Automatic	Green	Red	Standby (B14)	84-ACKS-B14-04BD
	PNP/NPN; NO/NC	Dynamic	Automatic	Green	Red	arrows (B15)	84-ACKS-B15-04BE
	PNP/NPN; NO/NC	Dynamic	Automatic	Green	Red	START (C10)	84-ACKS-C10-04BF
	PNP/NPN; NO/NC	Dynamic	Automatic	Green	Red	STOP (C11)	84-ACKS-C11-04C0
	PNP/NPN; NO/NC	Dynamic	Automatic	Green	Red	ON/OFF (C12)	84-ACKS-C12-04C1
	PNP/NPN; NO/NC	Dynamic	Automatic	Green	Red	Standby (C14)	84-ACKS-C14-04C2
	PNP/NPN; NO/NC	Dynamic	Automatic	Green	Red	Standby (C16)	84-ACKS-C16-04C3
	PNP/NPN; NO/NC	Dynamic	Automatic	Green	Red	START (C17)	84-ACKS-C17-04C4
	PNP/NPN; NO/NC	Dynamic	Automatic	Green	Red	STOP (C18)	84-ACKS-C18-04C5
	PNP/NPN; NO/NC	Dynamic	Automatic	Green	Red	RESET (C19)	84-ACKS-C19-04C6
	PNP/NPN; NO/NC	Dynamic	Automatic	Green	Red	C20	84-ACKS-C20-04C7

Wiring diagrams

3-pole

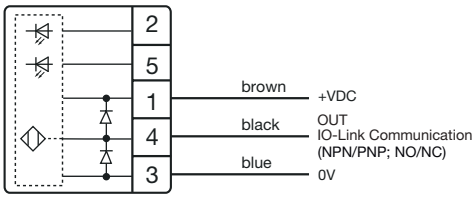

Wiring diagram

4-pole

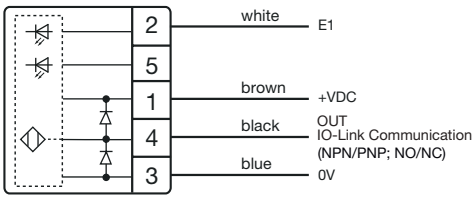

Wiring diagram

5-pole

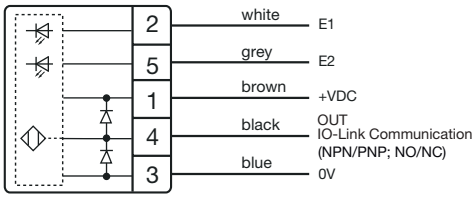

Wiring diagram

Component layouts

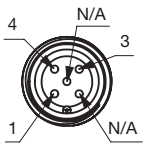

Component layout

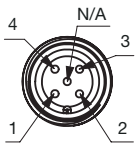

Component layout

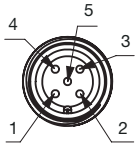

Component layout

84 Raised design

Stop switch, IP65, IP66, IP67

Product can differ from the current configuration.

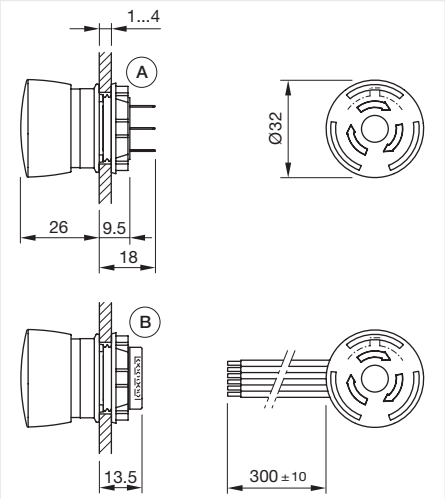

Dimensions [mm]
A = Plug-in terminal 2.8 mm x 0.5 mm
B = Flat ribbon cable

Equipment consisting of (schematic overview)

Actuator

Fixing nut

Each Part Number listed below includes all the black components shown in the 3D-drawing.

General information

- Position indication ring black
- Lens plastic grey

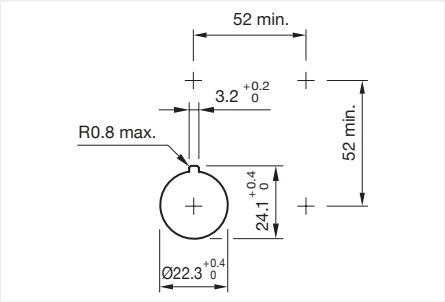

Mounting cut-outs [mm]

Stop switch, Front dimension Ø 32 mm

Switching action	Contacts	Terminal	Lens colour	Illumination colour	Product attributes	Switching position ring	Part No.	Wiring diagram	Component Layout
Maintained	1 NC	Plug-in terminal, 2.8 x 0.5 mm	Grey		Twist to unlock clockwise	Black	84-6220.0020	345	99
	1 NC	Flat ribbon cable 300 mm	Grey		Twist to unlock clockwise	Black	84-6220.0040	426	98
	1 NC	Plug-in terminal, 2.8 x 0.5 mm	Grey	Red	Twist to unlock clockwise	Black	84-6221.2B20	348	99
	1 NC	Flat ribbon cable 300 mm	Grey	Red	Twist to unlock clockwise	Black	84-6221.2B40	429	98
	1 NC / 1 NO	Plug-in terminal, 2.8 x 0.5 mm	Grey		Twist to unlock clockwise	Black	84-6230.0020	346	99
	1 NC / 1 NO	Flat ribbon cable 300 mm	Grey		Twist to unlock clockwise	Black	84-6230.0040	427	98
	1 NC / 1 NO	Plug-in terminal, 2.8 x 0.5 mm	Grey	Red	Twist to unlock clockwise	Black	84-6231.2B20	349	99
	1 NC / 1 NO	Flat ribbon cable 300 mm	Grey	Red	Twist to unlock clockwise	Black	84-6231.2B40	431	98
	2 NC	Plug-in terminal, 2.8 x 0.5 mm	Grey		Twist to unlock clockwise	Black	84-6240.0020	347	99
	2 NC	Flat ribbon cable 300 mm	Grey	none	Twist to unlock clockwise	Black	84-6240.0040	428	98
	2 NC	Plug-in terminal, 2.8 x 0.5 mm	Grey	Red	Twist to unlock clockwise	Black	84-6241.2B20	350	99

Contacts: NC = Normally closed, NO = Normally open

Switching action	Contacts	Terminal	Lens colour	Illumination colour	Product attributes	Switching position ring	Part No.	Wiring dia-gram	Compo-nent Layout
Maintained	2 NC	Flat ribbon cable 300 mm	Grey	Red	Twist to unlock clockwise	Black	84-6241.2B40	430	98
	1 NC / 1 NO	Flat ribbon cable 300 mm	Black	none	Twist to unlock clockwise	Black	84-6330.0040	427	98
	1 NC / 1 NO	Plug-in terminal, 2.8 x 0.5 mm	Black	Red	Twist to unlock clockwise	Black	84-6331.2B20	349	99
	1 NC / 1 NO	Flat ribbon cable 300 mm	Black	Red	Twist to unlock clockwise	Black	84-6331.2B40	431	98
	2 NC	Flat ribbon cable 300 mm	Black	none	Twist to unlock clockwise	Black	84-6340.0040	428	98
	2 NC	Plug-in terminal, 2.8 x 0.5 mm	Black	Red	Twist to unlock clockwise	Black	84-6341.2B20	350	99
	2 NC	Flat ribbon cable 300 mm	Black	Red	Twist to unlock clockwise	Black	84-6341.2B40	430	98

Contacts: NC = Normally closed, NO = Normally open

Wiring diagrams

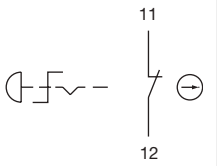

Wiring diagram 345

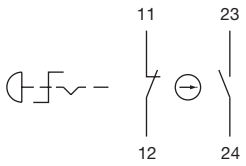

Wiring diagram 346

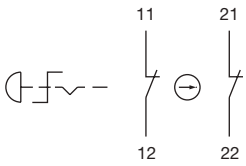

Wiring diagram 347

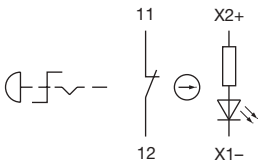

Wiring diagram 348

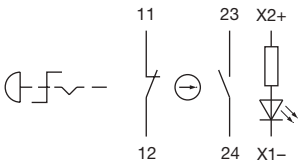

Wiring diagram 349

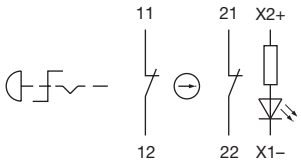

Wiring diagram 350

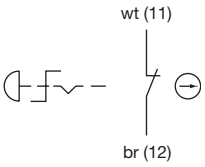

Wiring diagram 426

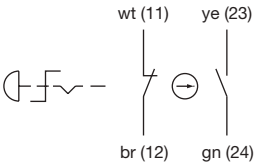

Wiring diagram 427

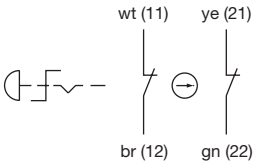

Wiring diagram 428

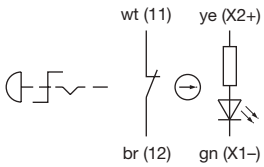

Wiring diagram 429

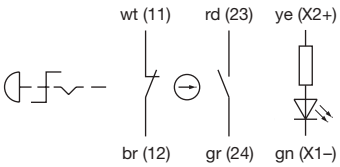

Wiring diagram 430

84 Raised design

Component layouts

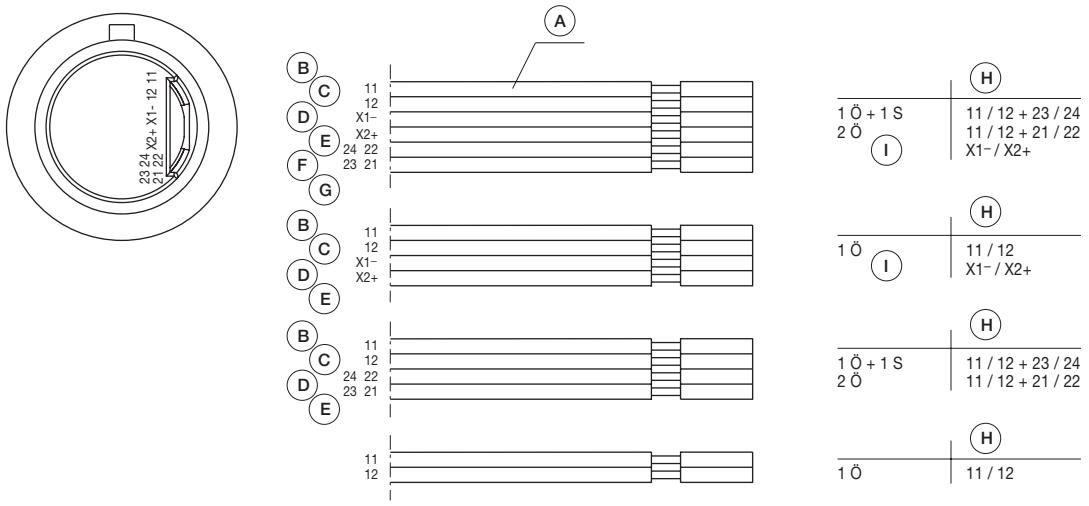

Component layout 98

A = Cable
B = white
C = brown
D = green
E = yellow
F = grey
G = pink
H = Terminals
I = Illumination

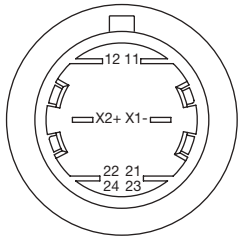

Component layout 99

Emergency stop switch, IP65, IP66, IP67

Equipment consisting of (schematic overview)

Actuator

Fixing nut

Each Part Number listed below includes all the black components shown in the 3D-drawing.

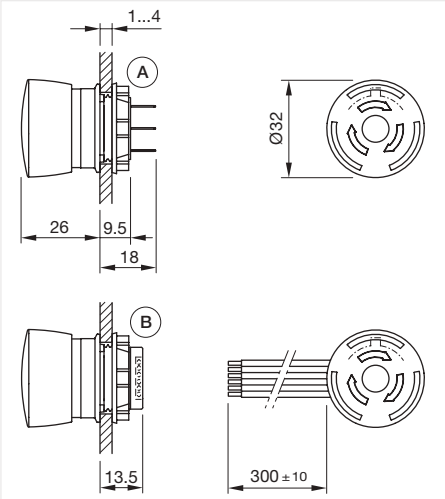

Dimensions [mm]
A = Plug-in terminal 2.8 mm x 0.5 mm
B = Flat ribbon cable

Product can differ from the current configuration.

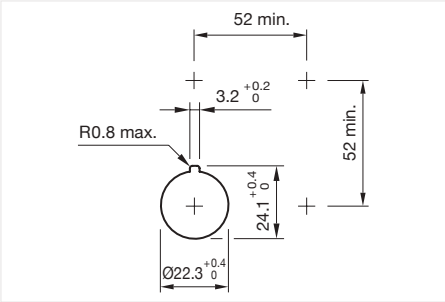

Mounting cut-outs [mm]

General information

- Lens plastic red

Emergency stop switch, Front dimension Ø 32 mm

Switching action	Contacts	Terminal	Lens colour	Illumination colour	Switching position ring	Part No.	Wiring diagram	Compo-nent Layout
Maintained	1 NC	Plug-in terminal, 2.8 x 0.5 mm	Red-white		Black	84-5220.0020	345	99
	1 NC	Flat ribbon cable 300 mm	Red-white		Black	84-5220.0040	426	98
	1 NC	Plug-in terminal, 2.8 x 0.5 mm	Red	Red	Black	84-5221.2B20	348	99
	1 NC	Flat ribbon cable 300 mm	Red	Red	Black	84-5221.2B40	429	98
	1 NC / 1 NO	Plug-in terminal, 2.8 x 0.5 mm	Red-white		Black	84-5230.0020	346	99
	1 NC / 1 NO	Flat ribbon cable 300 mm	Red-white		Black	84-5230.0040	427	98
	1 NC / 1 NO	Plug-in terminal, 2.8 x 0.5 mm	Red	Red	Black	84-5231.2B20	349	99
	1 NC / 1 NO	Flat ribbon cable 300 mm	Red	Red	Black	84-5231.2B40	430	98
	2 NC	Plug-in terminal, 2.8 x 0.5 mm	Red-white		Black	84-5240.0020	347	99
	2 NC	Flat ribbon cable 300 mm	Red-white		Black	84-5240.0040	428	98
	2 NC	Plug-in terminal, 2.8 x 0.5 mm	Red	Red	Black	84-5241.2B20	350	99
	2 NC	Flat ribbon cable 300 mm	Red	Red	Black	84-5241.2B40	431	98

Contacts: NC = Normally closed, NO = Normally open

84 Raised design

Switching action	Contacts	Terminal	Lens colour	Illumination colour	Switching position ring	Part No.	Wiring diagram	Compo-nent Layout
Maintained	1 NC	Plug-in terminal, 2.8 x 0.5 mm	Red-white		Green	84-5320.0020	345	99
	1 NC	Flat ribbon cable 300 mm	Red-white		Green	84-5320.0040	426	98
	1 NC	Plug-in terminal, 2.8 x 0.5 mm	Red	Red	Green	84-5321.2B20	347	99
	1 NC	Flat ribbon cable 300 mm	Red	Red	Green	84-5321.2B40	429	98
	1 NC / 1 NO	Plug-in terminal, 2.8 x 0.5 mm	Red-white		Green	84-5330.0020	346	99
	1 NC / 1 NO	Flat ribbon cable 300 mm	Red-white		Green	84-5330.0040	427	98
	1 NC / 1 NO	Plug-in terminal, 2.8 x 0.5 mm	Red	Red	Green	84-5331.2B20	349	99
	1 NC / 1 NO	Flat ribbon cable 300 mm	Red	Red	Green	84-5331.2B40	430	98
	2 NC	Plug-in terminal, 2.8 x 0.5 mm	Red-white		Green	84-5340.0020	347	99
	2 NC	Flat ribbon cable 300 mm	Red-white		Green	84-5340.0040	428	98
	2 NC	Plug-in terminal, 2.8 x 0.5 mm	Red	Red	Green	84-5341.2B20	350	99
	2 NC	Flat ribbon cable 300 mm	Red	Red	Green	84-5341.2B40	431	98
	1 NC	Plug-in terminal, 2.8 x 0.5 mm	Red		Green	84-5520.0020	345	99
	1 NC / 1 NO	Plug-in terminal, 2.8 x 0.5 mm	Red		Green	84-5530.0020	346	99
	2 NC	Plug-in terminal, 2.8 x 0.5 mm	Red		Green	84-5540.0020	347	99
	1 NC	Flat ribbon cable 300 mm	Red		Green	84-5520.0040	426	98
	1 NC / 1 NO	Flat ribbon cable 300 mm	Red		Green	84-5530.0040	427	98
	2 NC	Flat ribbon cable 300 mm	Red		Green	84-5540.0040	428	98

Contacts: NC = Normally closed, NO = Normally open

Wiring diagrams

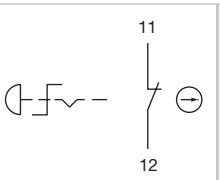

Wiring diagram 345

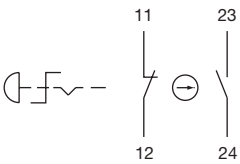

Wiring diagram 346

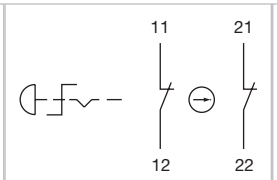

Wiring diagram 347

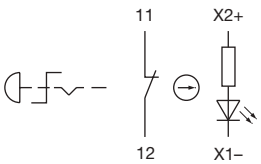

Wiring diagram 348

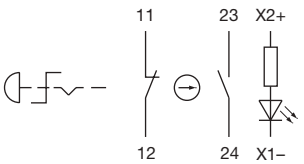

Wiring diagram 349

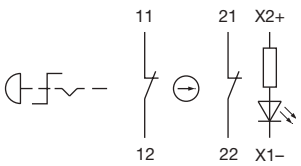

Wiring diagram 350

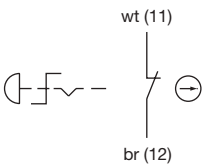

Wiring diagram 426

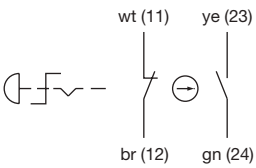

Wiring diagram 427

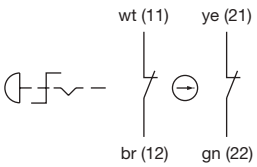

Wiring diagram 428

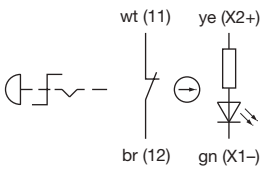

Wiring diagram 429

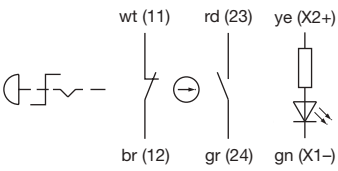

Wiring diagram 430

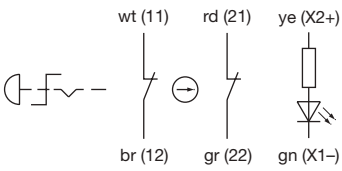

Wiring diagram 431

Component layouts

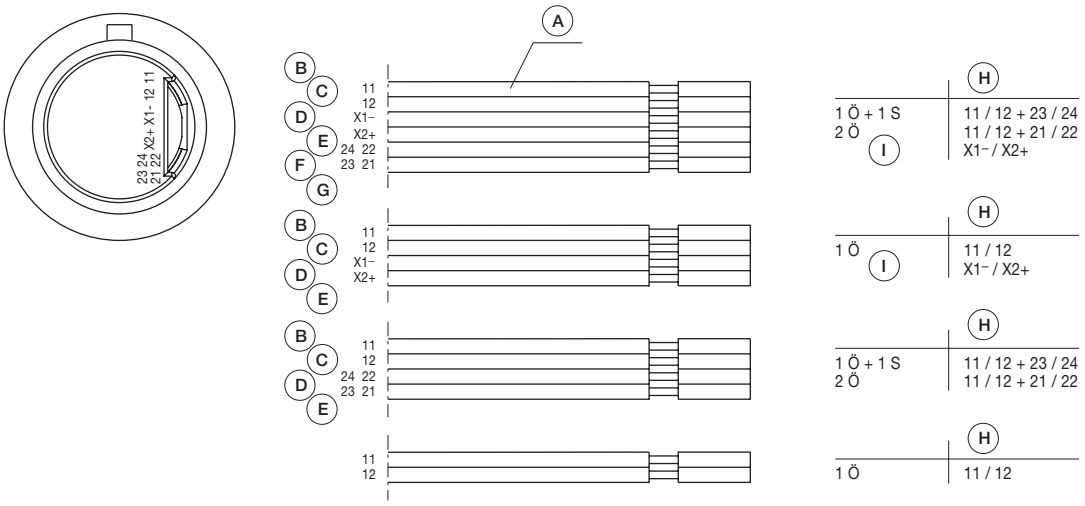

Component layout 98

A = Cable
B = white
C = brown
D = green
E = yellow
F = grey
G = pink
H = Terminals
I = Illumination

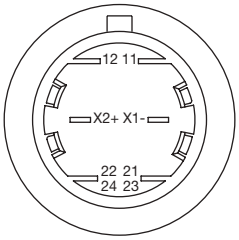

Component layout 99

84 Raised design

Emergency stop switch, Bi-Colour, IP65, IP66, IP67

Product can differ from the current configuration.

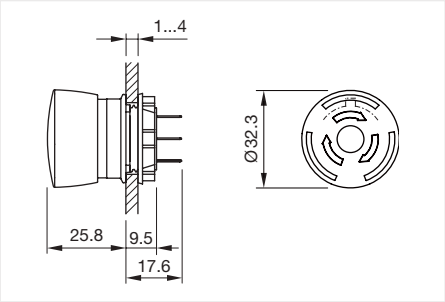

Dimensions [mm]

Equipment consisting of (schematic overview)

Actuator

Fixing nut

Each Part Number listed below includes all the black components shown in the 3D-drawing.

General information

- Lens plastic red
- Without built-in series resistor
- Operating voltage LED 2,2 VDC (Red), 2,6 VDC (Green)

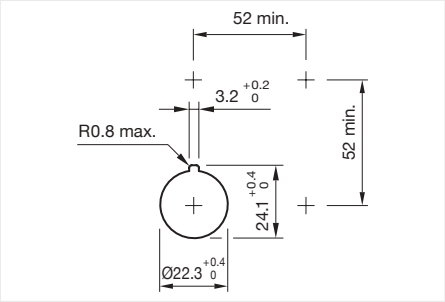

Mounting cut-outs [mm]

Emergency stop switch, Front dimension Ø 32 mm

Switching action	Con-tacts	Terminal	Lens colour	Illumination colour	Product attributes	Switching position ring	Part No.	Wiring diagram	Compo-nent Layout
Maintained	2 NC	Plug-in terminal, 2.8 x 0.5 mm	Red	Red / Green	Twist to unlock clockwise, position indication ring black	Black	84-5241.8D20	470	126
	2 NC	Plug-in terminal, 2.8 x 0.5 mm	Red	Red / Green	Twist to unlock clockwise, position indication ring green	Green	84-5341.8D20	470	126
	2 NC	Flat ribbon cable 300 mm	Red	Red / Green	Twist to unlock clockwise, position indication ring black	Black	84-5241.8D40	471	125
	2 NC	Flat ribbon cable 300 mm	Red	Red / Green	Twist to unlock clockwise, position indication ring green	Green	84-5341.8D40	471	125

Contacts: NC = Normally closed

Wiring diagrams

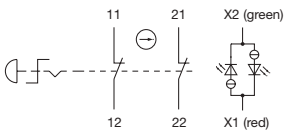

Wiring diagram 470

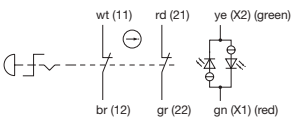

Wiring diagram 471

Component layouts

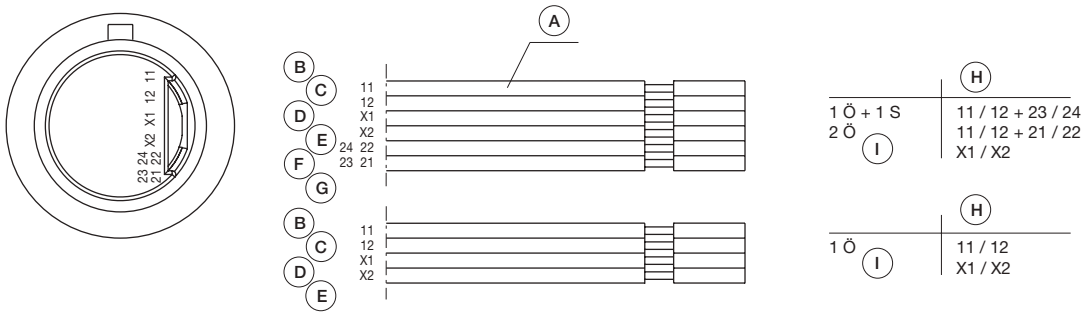

Component layout 125

A = Cable
B = white
C = brown
D = green
E = yellow
F = grey
G = pink
H = Terminals
I = Illumination

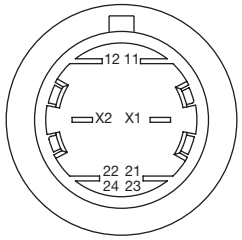

Component layout 126

84 Raised design

USB socket

Product can differ from the current configuration.

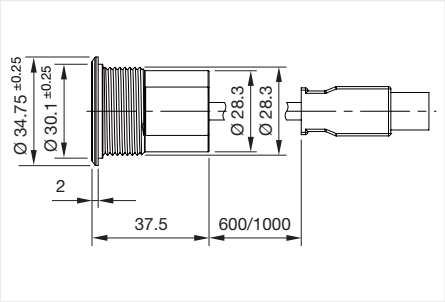

Dimensions [mm]

Actuator

Terminal	Terminal lenght cable	Mounting cut-out	Front dimension	Part No.
USB 3.0 socket type A-A	600 mm	Ø 30.1 mm	Ø 34,75 mm	84-3103.0000.1
	1000 mm	Ø 30.1 mm	Ø 34,75 mm	84-3103.0000.2

Lens for stop request pushbutton

Lens material	Lens colour	Lens optics	Lens shape	Lens illumination	Lens type	Symbol	Dimension	Part No.
Aluminium	Nature	opaque	flush	non illuminative	raised above front bezel	Door open	Ø 19.7 mm	84-7205.804A
	Nature	opaque	flush	non illuminative	raised above front bezel	Wheelchair	Ø 19.7 mm	84-7205.805A
	Nature	opaque	flush	non illuminative	raised above front bezel	Baby pram	Ø 19.7 mm	84-7205.806A
	Nature	opaque	flush	non illuminative	raised above front bezel	Bell	Ø 19.7 mm	84-7205.808A

Additional information

- With raised labelling symbol (Door open, Wheelchair, Baby pram), TSI compliant
- The colour of anodised aluminium parts can vary due to technical production reasons

Lens metall for halo illumination

Lens material	Lens colour	Lens optics	Lens shape	Lens illumination	Lens type	Symbol	Dimension	Part No.
Aluminium	Black	opaque	flush	non illuminative	raised above front bezel	no symbol	Ø 19.7 mm	84-7205.000A
	Red	opaque	flush	non illuminative	raised above front bezel	no symbol	Ø 19.7 mm	84-7205.200A
	Olive green	opaque	flush	non illuminative	raised above front bezel	no symbol	Ø 19.7 mm	84-7205.500A
	Blue	opaque	flush	non illuminative	raised above front bezel	no symbol	Ø 19.7 mm	84-7205.600A
	Nature	opaque	flush	non illuminative	raised above front bezel	no symbol	Ø 19.7 mm	84-7205.800A
	Black	opaque	convex	non illuminative	raised above front bezel	no symbol	Ø 19.7 mm	84-7202.000A
	Red	opaque	convex	non illuminative	raised above front bezel	no symbol	Ø 19.7 mm	84-7202.200A
	Blue	opaque	convex	non illuminative	raised above front bezel	no symbol	Ø 19.7 mm	84-7202.600A
	Nature	opaque	convex	non illuminative	raised above front bezel	no symbol	Ø 19.7 mm	84-7202.800A

Additional information

- The colour of anodised aluminium parts can vary due to technical production reasons

Lens plastic

Lens material	Lens colour	Lens optics	Lens shape	Lens illumination	Lens type	Symbol	Dimension	Part No.
Plastic	Red	transparent	flush	illuminative	level with front bezel	no symbol	Ø 19.7 mm	84-7111.200
	Orange	transparent	flush	illuminative	level with front bezel	no symbol	Ø 19.7 mm	84-7111.300
	Yellow	transparent	flush	illuminative	level with front bezel	no symbol	Ø 19.7 mm	84-7111.400
	Green	transparent	flush	illuminative	level with front bezel	no symbol	Ø 19.7 mm	84-7111.500
	Blue	transparent	flush	illuminative	level with front bezel	no symbol	Ø 19.7 mm	84-7111.600
	Colourless	transparent	flush	illuminative	level with front bezel	no symbol	Ø 19.7 mm	84-7111.700
	Black	opaque	flush	non illuminative	level with front bezel	no symbol	Ø 19.7 mm	84-7121.000
	Grey	opaque	flush	non illuminative	level with front bezel	no symbol	Ø 19.7 mm	84-7121.800
	Red	transparent	flush	illuminative	raised above front bezel	no symbol	Ø 19.7 mm	84-7115.200
	Orange	transparent	flush	illuminative	raised above front bezel	no symbol	Ø 19.7 mm	84-7115.300
	Yellow	transparent	flush	illuminative	raised above front bezel	no symbol	Ø 19.7 mm	84-7115.400
	Green	transparent	flush	illuminative	raised above front bezel	no symbol	Ø 19.7 mm	84-7115.500
	Blue	transparent	flush	illuminative	raised above front bezel	no symbol	Ø 19.7 mm	84-7115.600
	Colourless	transparent	flush	illuminative	raised above front bezel	no symbol	Ø 19.7 mm	84-7115.700
	Black	opaque	flush	non illuminative	raised above front bezel	no symbol	Ø 19.7 mm	84-7125.000
	Grey	opaque	flush	non illuminative	raised above front bezel	no symbol	Ø 19.7 mm	84-7125.800

Lens plastic with symbol

Lens material	Lens colour	Lens optics	Lens shape	Lens illumination	Lens type	Symbol	Dimension	Part No.
Plastic	Red	transparent	flush	illuminative	level with front bezel	Ring	Ø 19.7 mm	84-7111.201
	Orange	transparent	flush	illuminative	level with front bezel	Ring	Ø 19.7 mm	84-7111.301
	Yellow	transparent	flush	illuminative	level with front bezel	Ring	Ø 19.7 mm	84-7111.401
	Green	transparent	flush	illuminative	level with front bezel	Ring	Ø 19.7 mm	84-7111.501
	Blue	transparent	flush	illuminative	level with front bezel	Ring	Ø 19.7 mm	84-7111.601
	Colourless	transparent	flush	illuminative	level with front bezel	Ring	Ø 19.7 mm	84-7111.701
	Green	transparent	flush	illuminative	level with front bezel	ON/OFF	Ø 19.7 mm	84-7111.502
	Blue	transparent	flush	illuminative	level with front bezel	ON/OFF	Ø 19.7 mm	84-7111.602
	Colourless	transparent	flush	illuminative	level with front bezel	ON/OFF	Ø 19.7 mm	84-7111.702
	Green	transparent	flush	illuminative	level with front bezel	Standby	Ø 19.7 mm	84-7111.503
	Blue	transparent	flush	illuminative	level with front bezel	Standby	Ø 19.7 mm	84-7111.603
	Colourless	transparent	flush	illuminative	level with front bezel	Standby	Ø 19.7 mm	84-7111.703

Additional information

- The silvery coat is being applied on the lens (screen print) with an additional protective lacquer. Further information see Technical data

Lens metal

Lens material	Lens colour	Lens optics	Lens shape	Lens illumination	Lens type	Symbol	Dimension	Part No.
Aluminium	Black	opaque	flush	non illuminative	level with front bezel	no symbol	Ø 19.7 mm	84-7201.000
	Red	opaque	flush	non illuminative	level with front bezel	no symbol	Ø 19.7 mm	84-7201.200
	Gold	opaque	flush	non illuminative	level with front bezel	no symbol	Ø 19.7 mm	84-7201.400
	Olive green	opaque	flush	non illuminative	level with front bezel	no symbol	Ø 19.7 mm	84-7201.500
	Blue	opaque	flush	non illuminative	level with front bezel	no symbol	Ø 19.7 mm	84-7201.600
	Nature	opaque	flush	non illuminative	level with front bezel	no symbol	Ø 19.7 mm	84-7201.800
	Red	opaque	flush	non illuminative	raised above front bezel	no symbol	Ø 19.7 mm	84-7205.200
	Nature	opaque	flush	non illuminative	raised above front bezel	no symbol	Ø 19.7 mm	84-7205.800
	Black	opaque	convex	non illuminative	level with front bezel	no symbol	Ø 19.7 mm	84-7202.000
	Red	opaque	convex	non illuminative	level with front bezel	no symbol	Ø 19.7 mm	84-7202.200
	Olive green	opaque	convex	non illuminative	level with front bezel	no symbol	Ø 19.7 mm	84-7202.500
	Nature	opaque	convex	non illuminative	level with front bezel	no symbol	Ø 19.7 mm	84-7202.800

Additional information

- The colour of anodised aluminium parts can vary due to technical production reasons

Lens metal with spot

Lens material	Lens colour	Lens optics	Lens shape	Lens illumination	Lens type	Symbol	Dimension	Part No.
Aluminium	Black	opaque	flush	illuminative	level with front bezel	no symbol	Ø 19.7 mm	84-7211.000
	Red	opaque	flush	illuminative	level with front bezel	no symbol	Ø 19.7 mm	84-7211.200
	Gold	opaque	flush	illuminative	level with front bezel	no symbol	Ø 19.7 mm	84-7211.400
	Olive green	opaque	flush	illuminative	level with front bezel	no symbol	Ø 19.7 mm	84-7211.500
	Blue	opaque	flush	illuminative	level with front bezel	no symbol	Ø 19.7 mm	84-7211.600
	Nature	opaque	flush	illuminative	level with front bezel	no symbol	Ø 19.7 mm	84-7211.800
	Black	opaque	flush	illuminative	raised above front bezel	no symbol	Ø 19.7 mm	84-7215.000
	Red	opaque	flush	illuminative	raised above front bezel	no symbol	Ø 19.7 mm	84-7215.200
	Gold	opaque	flush	illuminative	raised above front bezel	no symbol	Ø 19.7 mm	84-7215.400
	Olive green	opaque	flush	illuminative	raised above front bezel	no symbol	Ø 19.7 mm	84-7215.500
	Blue	opaque	flush	illuminative	raised above front bezel	no symbol	Ø 19.7 mm	84-7215.600
	Nature	opaque	flush	illuminative	raised above front bezel	no symbol	Ø 19.7 mm	84-7215.800

Additional information

- The colour of anodised aluminium parts can vary due to technical production reasons

Mushroom-head cap

Lens material	Lens colour	Lens optics	Lens shape	Lens illumination	Symbol	Dimension	Part No.
Plastic	Blue	transparent	mushroom-head	illuminative	no symbol		84-7114.600A
	Black	opaque	mushroom-head	non illuminative	no symbol	Ø 25 mm	84-7124.000A
	Red	opaque	mushroom-head	non illuminative	no symbol	Ø 25 mm	84-7124.200A

Marking plate

Marking plate material	Marking plate colour	Marking plate optics	Marking plate illumination	Dimension	Diameter	Part No.
Plastic	Colourless	transparent	illuminative	Ø 16 mm	16 mm	61-9707.7

Additional information

- Can be hot stamped

Single-LED, T1 3/4 MG

Illumination colour	Operating voltage	Lumi. Intensity	Dom. Wavelength	Forward voltage	Part No.	Wiring diagram
Red	2 - 6,00 V DC	160 mcd	625 nm	2.0 VDC @ 20 mA	10-2601.3172S	4
Amber	2 - 6,00 V DC	165 mcd	605 nm	2.0 VDC @ 20 mA	10-2601.3173S	4
Yellow	2 - 6,00 V DC	600 mcd	580 nm	2.9 VDC @ 20 mA	10-2603.3174S	4
Green	2 - 6,00 V DC	650 mcd	525 nm	3.2 VDC @ 20 mA	10-2603.3175S	4
Blue	2 - 6,00 V DC	250 mcd	467 nm	3.0 VDC @ 20 mA	10-2603.3176S	4
White	2 - 6,00 V DC	500 mcd	x: 0,31 / y: 0,32 nm	3.2 VDC @ 20 mA	10-2603.3178S	4

Additional information

- The customer has to decide what series resistor shall be used to the LED
- Luminosity and wave length variations caused by LED manufacturing processes may cause slight differences regarding the illumination. The customer has to decide what resistor shall be used to the LED

Wiring diagrams

Wiring diagram

Bi-colour LED,T1 Bi-Pin

Illumination colour	Lumi. Intensity	Dom. Wavelength	Forward voltage	Part No.	Wiring diagram
Red / Green	1900/4200 mcd	630/525 nm	1.9/3.3 V DC @ 20 mA	10-2603.320AT	352
Yellow / Green	1100/900 mcd	588/525 nm	2.0/3.2 V DC @ 20 mA	10-2603.320CT	352

Additional information

- The customer has to decide what series resistor shall be used to the LED
- Luminosity and wave length variations caused by LED manufacturing processes may cause slight differences regarding the illumination. The customer has to decide what resistor shall be used to the LED

Wiring diagrams

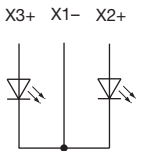

Wiring diagram 352

Switching element with illumination and plug-in terminal

Operating voltage	Operation current	Switching system	Contacts	Contact material	Illumination colour	Terminal	Part No.	Wiring diagram
12 V DC ±10 %	10 mA	Short-travel element	1 NO	Gold-plated silver	Red	Plug-in terminal, 2.8 x 0.8 mm	84-8511.2320	354
	10 mA	Short-travel element	1 NO	Gold-plated silver	Orange	Plug-in terminal, 2.8 x 0.8 mm	84-8511.3320	354
	10 mA	Short-travel element	1 NO	Gold-plated silver	Yellow	Plug-in terminal, 2.8 x 0.8 mm	84-8511.4320	354
	10 mA	Short-travel element	1 NO	Gold-plated silver	Green	Plug-in terminal, 2.8 x 0.8 mm	84-8511.5320	354
	10 mA	Short-travel element	1 NO	Gold-plated silver	Blue	Plug-in terminal, 2.8 x 0.8 mm	84-8511.6320	354
	10 mA	Short-travel element	1 NO	Gold-plated silver	White	Plug-in terminal, 2.8 x 0.8 mm	84-8511.9320	354
24 V DC ±10 %	10 mA	Short-travel element	1 NO	Gold-plated silver	Red	Plug-in terminal, 2.8 x 0.8 mm	84-8511.2620	354
	10 mA	Short-travel element	1 NO	Gold-plated silver	Orange	Plug-in terminal, 2.8 x 0.8 mm	84-8511.3620	354
	10 mA	Short-travel element	1 NO	Gold-plated silver	Yellow	Plug-in terminal, 2.8 x 0.8 mm	84-8511.4620	354
	10 mA	Short-travel element	1 NO	Gold-plated silver	Green	Plug-in terminal, 2.8 x 0.8 mm	84-8511.5620	354
	10 mA	Short-travel element	1 NO	Gold-plated silver	Blue	Plug-in terminal, 2.8 x 0.8 mm	84-8511.6620	354
	10 mA	Short-travel element	1 NO	Gold-plated silver	White	Plug-in terminal, 2.8 x 0.8 mm	84-8511.9620	354

Contacts: NO = Normally open

Additional information

- LED and built-in resistor included
- Standard version: Cable length 300 mm
- Other options on request: Customisation of cable and connectors, rear side fully sealed (IP 67)
- Protection degree (rear side): IP 40, upgrade to IP 67 with plug Part No. 84-900 possible. With applications where strong vibrations occure, the plugs may become loose
- Luminosity and wave length variations caused by LED manufacturing processes may cause slight differences regarding the illumination. The customer has to decide what resistor shall be used to the LED

Wiring diagrams

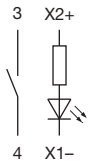

Wiring diagram 354

Switching element with illumination andflat ribbon cable

Operating voltage	Operation current	Switching system	Contacts	Contact material	Illumination colour	Terminal	Part No.	Wiring diagram	Component Layout
12 V DC ±10 %	10 mA	Short-travel element	1 NO	Gold-plated silver	Red	Flat ribbon cable	84-8511.2340	354	119
	10 mA	Short-travel element	1 NO	Gold-plated silver	Yellow	Flat ribbon cable	84-8511.4340	354	119
	10 mA	Short-travel element	1 NO	Gold-plated silver	Green	Flat ribbon cable	84-8511.5340	354	119
	10 mA	Short-travel element	1 NO	Gold-plated silver	Blue	Flat ribbon cable	84-8511.6340	354	119
	10 mA	Short-travel element	1 NO	Gold-plated silver	White	Flat ribbon cable	84-8511.9340	354	119
24 V DC ±10 %	10 mA	Short-travel element	1 NO	Gold-plated silver	Red	Flat ribbon cable	84-8511.2640	354	119
	10 mA	Short-travel element	1 NO	Gold-plated silver	Orange	Flat ribbon cable	84-8511.3640	354	119
	10 mA	Short-travel element	1 NO	Gold-plated silver	Yellow	Flat ribbon cable	84-8511.4640	354	119
	10 mA	Short-travel element	1 NO	Gold-plated silver	Green	Flat ribbon cable	84-8511.5640	354	119
	10 mA	Short-travel element	1 NO	Gold-plated silver	Blue	Flat ribbon cable	84-8511.6640	354	119
	10 mA	Short-travel element	1 NO	Gold-plated silver	White	Flat ribbon cable	84-8511.9640	354	119

Contacts: NO = Normally open

Additional information

- LED and built-in resistor included
- Standard version: Cable length 300 mm
- Other options on request: Customisation of cable and connectors, rear side fully sealed (IP 67)
- Protection degree (rear side): IP 40, upgrade to IP 67 with plug Part No. 84-900 possible. With applications where strong vibrations occure, the plugs may become loose
- Luminosity and wave length variations caused by LED manufacturing processes may cause slight differences regarding the illumination. The customer has to decide what resistor shall be used to the LED

Wiring diagrams

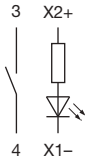

Wiring diagram 354

Switching element Bi-colour

Operating voltage	Operation current	Switching system	Contacts	Contact material	Illumination colour	Terminal	Part No.	Wiring diagram	Component Layout
24 V DC ±10 %	10 mA	Short-travel element	1 NO	Gold-plated silver	Red / Green	Flat ribbon cable	84-8515.8640	355	120
	10 mA	Short-travel element	1 NO	Gold-plated silver	Yellow / Green	Flat ribbon cable	84-8515.7640	355	120

Contacts: NO = Normally open

Additional information

- LED and built-in resistor included
- Cabel connection IP 67, rear side fully sealed. The illumination element of the cable version cannot be disconnected from the actuator any longer
- Best illumination level will be reached with aluminium lens with spot, Part No. 84-7215.x00 and 84-7211.x00
- Standard version: Cable length 300 mm
- Other options on request: Customisation of cable and connectors, rear side fully sealed (IP 67)
- Luminosity and wave length variations caused by LED manufacturing processes may cause slight differences regarding the illumination. The customer has to decide what resistor shall be used to the LED

Wiring diagrams

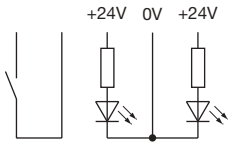

Wiring diagram 355

Switching element without illumination

Switching voltage	Switching current	Contacts	Contact material	Terminal	Part No.	Wiring diagram	Component Layout
42 V	0.1 A	1 NO	Gold-plated silver	Plug-in terminal, 2.8 x 0.8 mm	84-8510.0020	356	
Short-travel element	1 NO	Gold-plated silver	Flat ribbon cable		84-8510.0040	356	117

Contacts: NO = Normally open

Additional information

- Standard version: Cable length 300 mm
- Other options on request: Customisation of cable and connectors, rear side fully sealed (IP 67)
- Protection degree (rear side): IP 40, upgrade to IP 67 with plug Part No. 84-900 possible. With applications where strong vibrations occure, the plugs may become loose

Wiring diagrams

Wiring diagram 356

Switching element PCB illuminative

Switching system	Contacts	Contact material	Terminal	Part No.	Wiring diagram	Compo-nent Layout
Short-travel element	1 NO	Gold	PCB terminal	92-851.342	332	82

Contacts: NO = Normally open

Additional information

- The customer has to decide what series resistor shall be used to the LED
- LED and mounting flange to be ordered separately

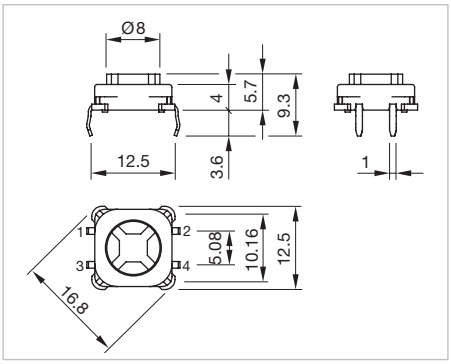

Dimensions [mm]

Wiring diagrams

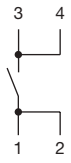

Wiring diagram 332

Component layouts

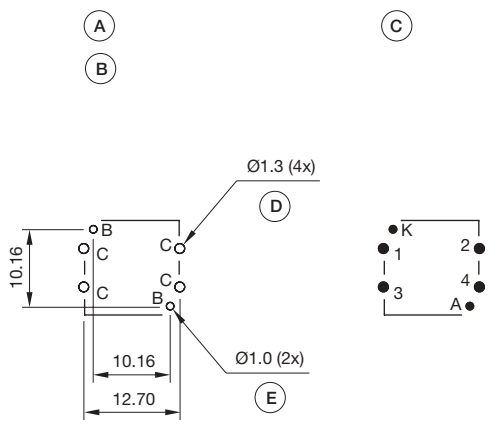

Component layout 82

A = Switching element with illumination
B = Single LED
C = Drilling plan (component side)
D = Hole for switching element, pad max. Ø 2.5 mm
E = Hole for LED

Illumination element with plug-in terminal

IP Protection	Illumination colour	Operating voltage	Terminal	Part No.	Wiring diagram
IP40	Red	12 V DC ±10 %	Plug-in terminal, 2.8 x 0.8 mm	84-8001.2320	351
	Yellow	12 V DC ±10 %	Plug-in terminal, 2.8 x 0.8 mm	84-8001.4320	351
	Green	12 V DC ±10 %	Plug-in terminal, 2.8 x 0.8 mm	84-8001.5320	351
	Blue	12 V DC ±10 %	Plug-in terminal, 2.8 x 0.8 mm	84-8001.6320	351
	White	12 V DC ±10 %	Plug-in terminal, 2.8 x 0.8 mm	84-8001.9320	351
	Red	24 V DC ±10 %	Plug-in terminal, 2.8 x 0.8 mm	84-8001.2620	351
	Amber	24 V DC ±10 %	Plug-in terminal, 2.8 x 0.8 mm	84-8001.3620	351
	Yellow	24 V DC ±10 %	Plug-in terminal, 2.8 x 0.8 mm	84-8001.4620	351
	Green	24 V DC ±10 %	Plug-in terminal, 2.8 x 0.8 mm	84-8001.5620	351
	Blue	24 V DC ±10 %	Plug-in terminal, 2.8 x 0.8 mm	84-8001.6620	351
	White	24 V DC ±10 %	Plug-in terminal, 2.8 x 0.8 mm	84-8001.9620	351

Additional information

- LED and built-in resistor included
- Standard version: Cable length 300 mm
- Other options on request: Customisation of cable and connectors, rear side fully sealed (IP 67)
- Protection degree (rear side): IP 40, upgrade to IP 67 with plug Part No. 84-900 possible. With applications where strong vibrations occure, the plugs may become loose
- Luminosity and wave length variations caused by LED manufacturing processes may cause slight differences regarding the illumination. The customer has to decide what resistor shall be used to the LED
- Standard version: Cable length 300 mm with insulated ferrule, plug-in terminal 2.8 mm x 0.5 mm

Wiring diagrams

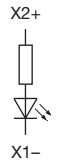

Wiring diagram 351

Illumination element with flat ribbon cable

IP Protection	Illumination colour	Operating voltage	Terminal	Part No.	Wiring diagram	Compo-nent Layout
IP40	Red	12 V DC ±10 %	Flat ribbon cable	84-8001.2340	351	118
	Yellow	12 V DC ±10 %	Flat ribbon cable	84-8001.4340	351	
	Green	12 V DC ±10 %	Flat ribbon cable	84-8001.5340	351	118
	White	12 V DC ±10 %	Flat ribbon cable	84-8001.9340	351	118
	Red	24 V DC ±10 %	Flat ribbon cable	84-8001.2640	351	118
	Amber	24 V DC ±10 %	Flat ribbon cable	84-8001.3640	351	118
	Yellow	24 V DC ±10 %	Flat ribbon cable	84-8001.4640	351	118
	Green	24 V DC ±10 %	Flat ribbon cable	84-8001.5640	351	118
	Blue	24 V DC ±10 %	Flat ribbon cable	84-8001.6640	351	118
	White	24 V DC ±10 %	Flat ribbon cable	84-8001.9640	351	118

Additional information

- LED and built-in resistor included
- Standard version: Cable length 300 mm
- Other options on request: Customisation of cable and connectors, rear side fully sealed (IP 67)
- Protection degree (rear side): IP 40, upgrade to IP 67 with plug Part No. 84-900 possible. With applications where strong vibrations occure, the plugs may become loose
- Luminosity and wave length variations caused by LED manufacturing processes may cause slight differences regarding the illumination. The customer has to decide what resistor shall be used to the LED

Wiring diagrams

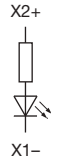

Wiring diagram 351

Illumination element bi-colour

IP Protection	Illumination colour	Operating voltage	Terminal	Part No.	Wiring diagram	Component Layout
IP40	Red / Green	24 V AC/DC ±10 %	Plug-in terminal, 2.8 x 0.8 mm	84-8005.8620	353	
IP67	Red / Green	24 V AC/DC ±10 %	Flat ribbon cable	84-8005.8640	353	121

Additional information

- LED and built-in resistor included
- Standard version: Cable length 300 mm
- Other options on request: Customisation of cable and connectors, rear side fully sealed (IP 67)
- Best illumination level will be reached with aluminium lens with spot, Part No. 84-7215.x00 and 84-7211.x00
- Protection degree (rear side): IP 40, upgrade to IP 67 with plug Part No. 84-900 possible. With applications where strong vibrations occure, the plugs may become loose
- Cabel connection IP 67, rear side fully sealed. The illumination element of the cable version cannot be disconnected from the actuator any longer
- Luminosity and wave length variations caused by LED manufacturing processes may cause slight differences regarding the illumination. The customer has to decide what resistor shall be used to the LED

Wiring diagrams

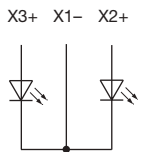

Wiring diagram 352

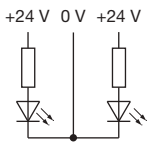

Wiring diagram 353

Wiring diagrams

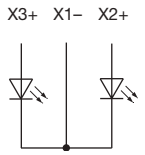

Wiring diagram 352

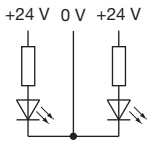

Wiring diagram 353

Component layouts

Component layout

Illumination element PCB

Terminal	Part No.	Wiring diagram	Component Layout
PCB terminal	92-800.042	330	79

Additional information

- The customer has to decide what series resistor shall be used to the LED
- LED and mounting flange to be ordered separately

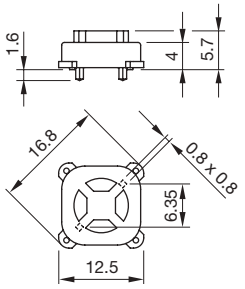

Dimensions [mm]

Wiring diagrams

Wiring diagram 330

84 Components

Component layouts

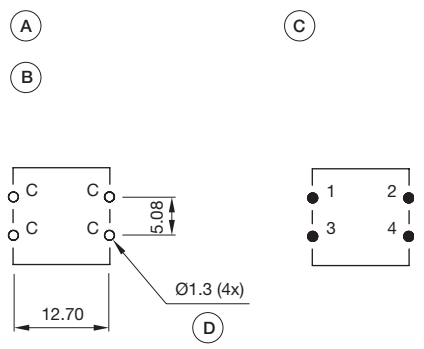

Component layout 79

A = Switching element without illumination
B = Drilling plan (component side)
C = Occupancy plan (component side)
D = Hole for switching element

Mounting flange

Product attributes	Material	Fastening	Part No.
Tightening torque fixing screw 0.3 Nm	Plastic	With screws	92-960.0
	Plastic	Mit Schrauben	84-960.0

Additional information

- For discrete switching applications including switching element and mounting flange, soldering terminal (assembled PCB incl. series resistor and LED on request)
- Halo illumination (illuminated multi-color bezel)

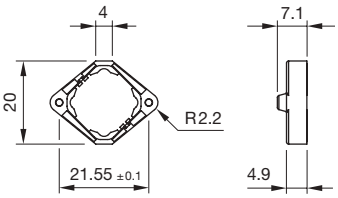

Dimensions [mm]
for Part No. 92-960.0

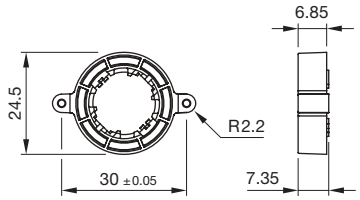

Dimensions [mm]
for Part No. 84-960.0

Front side

Legend frame

Dimension	Material	Colour	Surface	Mounting type	Mounting cut-out	Part No.
30 mm x 50 mm	Aluminium	Black	anodised	adhesive	Ø 22.5 mm	61-9980.0

Additional information

- For devices with front dimension Ø 25 mm, flush design
- The colour of anodised aluminium parts can vary due to technical production reasons

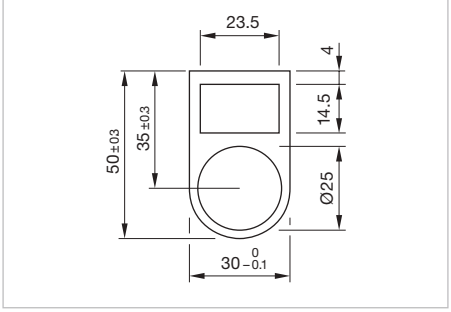

Dimensions [mm]

Legend plate

Product attributes	Dimension	Material	Colour	Surface	Mounting type	Part No.
For legend frame Part No.704.968.2 and 704.968.3	14.5 mm x 23.5 mm	Aluminium	Nature	anodised	adhesive	704.968.0
	14.5 mm x 23.5 mm	Aluminium	Black	anodised	adhesive	704.968.1

Additional information

- The colour of anodised aluminium parts can vary due to technical production reasons

84 Accessories

Emergency stop legend

Dimension	Material	Colour	Mounting cut-out	Marking	Part No.
Ø 60 mm	Plastic	Yellow	Ø 22.5 mm	NOT AUS	704.963.5
	Plastic	Yellow	Ø 22.5 mm	EMERGENCY STOP	704.963.6
	Plastic	Yellow	Ø 22.5 mm	ARRET D'URGENCE	704.963.7
	Plastic	Yellow	Ø 22.5 mm	NOT HALT	704.963.8
	Plastic	Yellow	Ø 22.5 mm	EN ISO 13850 symbol	704.963.9
Ø 90 mm	Plastic	Yellow	Ø 22.5 mm	NOT AUS	704.963.0
	Plastic	Yellow	Ø 22.5 mm	EMERGENCY STOP	704.963.1
	Plastic	Yellow	Ø 22.5 mm	ARRET D'URGENCE	704.963.2
	Plastic	Yellow	Ø 22.5 mm	NOT HALT	704.963.3
	Plastic	Yellow	Ø 22.5 mm	EN ISO 13850 symbol	704.963.4

Additional information

- Front panel thickness 3 mm max.

Blind plug

Dimension	Material	Colour	Mounting cut-out	Part No.
Ø 25 mm	Plastic	Black	Ø 22.5 mm	61-9453.0
Ø 36 mm	Plastic	Black	Ø 30.5 mm	704.964.8

Additional information

- Please note that bigger minimum distances are necessary
- Only for mounting in round hole without D-shape (Part No. 61-9453.0)

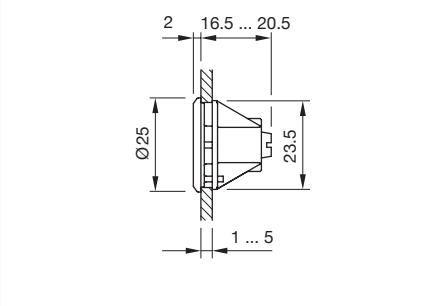

Dimensions [mm]
for Part No. 61-9453.0

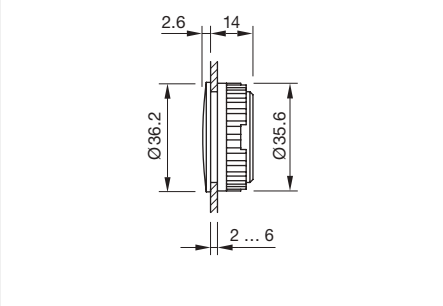

Dimensions [mm]
for Part No. 704.964.8

Protective cap

Product attributes	Dimension	Material	Colour	Optics	Part No.
For front bezel Ø 25 mm	Ø 25 mm	Silicone	Colourless	transparent	84-9103.7

Additional information

- For flat lens profil only
- When using the front protection cover the external sealing in the actuator has to be removed

Protection cover

Product attributes	Dimension	Material	Colour	Part No.
For USB socket	Ø 36 mm	Plastic	Black	84-916
For single pushbutton	42 mm x 33 mm x 8.5 mm	Aluminium Plastic	Colourless	84-922

Additional information

- When mounting the protective cover 84-916 make sure that the USB adapter is mounted in center position.

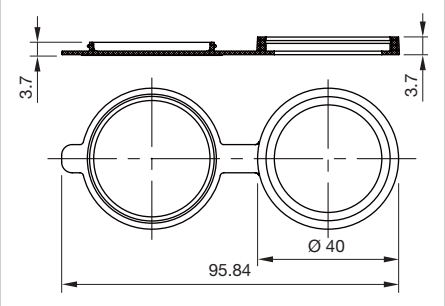

Dimensions [mm]
for Part No. 84-916

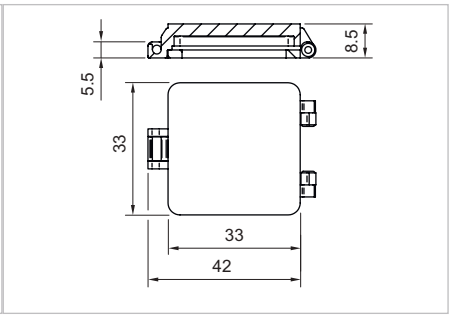

Dimensions [mm]
for Part No. 84-922

E stop protective shroud

Dimension	Material	Colour	Marking	Part No.
Ø 50 mm	Plastic	Yellow		84-902
	Plastic	Yellow	NOT - AUS	84-902A
	Plastic	Yellow	EMERGENCY STOP	84-902B
	Plastic	Yellow	NOT - HALT	84-902D
Ø 45 mm	Metal	Yellow		84-909
Ø 50 mm	Plastic	Yellow		84-906

Additional information

- Front panel thickness 1 … 3 mm
- With anti-twist device
- When using a protective shroud the e-stop or stop-switch has to be turned by 180° to be mounted. See dimensional drawing
- The protection shroud Part No. 84-909 is not suitable for a proper use of emergency-stop. It can obstruct a spontaneous operation of the emergency-stop switch
- This shroud Part No. 84-906 is not compliant to EN ISO 13850. There are no restrictions when combined with stop switches.

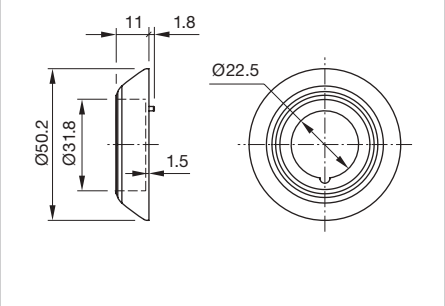

Dimensions [mm]
for Part No. 84-902, 84-902A
84-902B, 84-904C

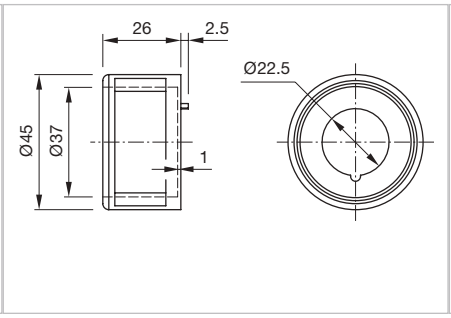

Dimensions [mm]
for Part No. 84-909

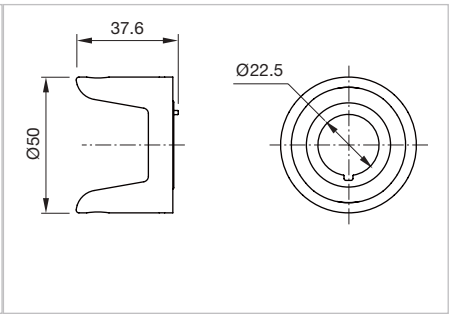

Dimensions [mm]
for Part No. 84-906

Rear side

Adaptor reducing to 25 mm

Product attributes	Material	Colour	Part No.
For housing, pole mounting 35 mm dia.	Plastic	Yellow	84-9300.4
	Plastic	Grey	84-9300.8

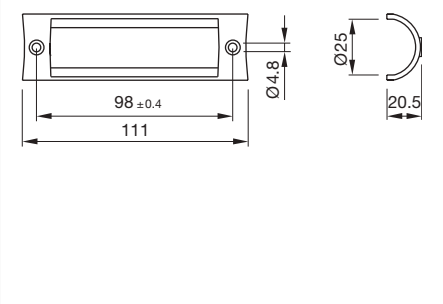

Dimensions [mm]

Adaptor reducing to 30 mm

Product attributes	Material	Colour	Part No.
For housing, pole mounting 35 mm dia.	Plastic	Yellow	84-9700.4
	Plastic	Grey	84-9700.8

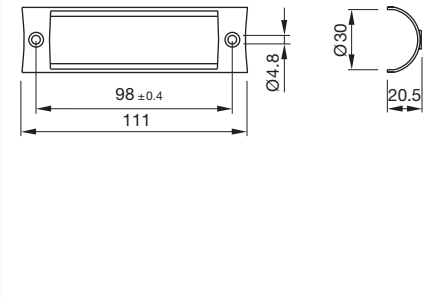

Dimensions [mm]

Flat receptacle

Product attributes	Material	Terminal	Part No.
2.8 x 0.8 mm plug-in terminal	Metal	null	84-9420

Insulation sleeve

Product attributes	Material	Terminal	Part No.
For flat receptacle 2.8 mm	Plastic	null	31-929

PCB plug-in base

Product attributes	Dimension	Material	Terminal	Pins	Part No.	Compo-nent Layout
For Emergency stop switch, stop switch	20.3 mm x 15.8 mm x 8.3 mm	Metal / plastic	PCB terminal	Axial	84-920	102

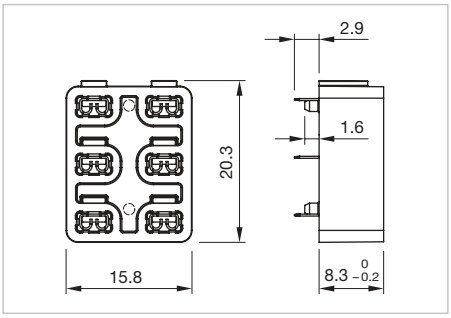

Dimensions [mm]

Component layouts

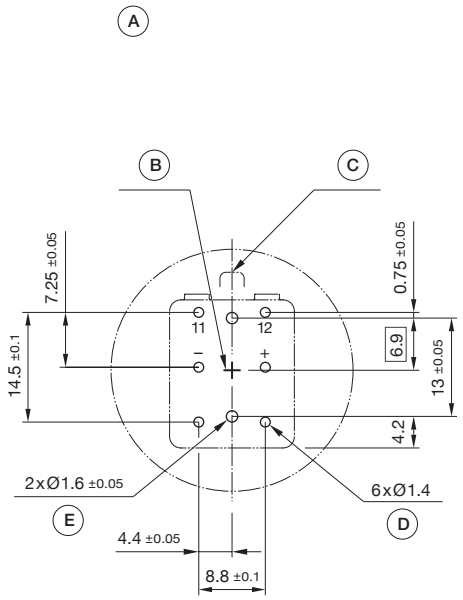

Component layout 102

A = Drilling plan (component side)
B = Centre from switch
C = Anti-twist protection
D = Pins for contacts/LED
E = Positioning hole

Plug

Material	Terminal	Part No.
Plastic	null	84-900

Additional information

- For back protection IP67 of switching elements and illumination elements. Two plugs are nessecary per element

Mounting

Enclosure

Product attributes	Dimension	Material	Colour	IP Protection	Part No.
With mounting cut-out 1 x Ø 22.3 mm, with anti-twist device	94 mm x 94 mm x 81 mm	Plastic	Grey	IP66	704.945.1
With mounting cut-out 2 x Ø 22.3 mm, with anti-twist device	130 mm x 94 mm x 81 mm	Plastic	Grey	IP66	704.945.2
With mounting cut-out 3 x Ø 22.3 mm, with anti-twist device	180 mm x 94 mm x 81 mm	Plastic	Grey	IP66	704.945.3
With mounting cut-out 4 x Ø 22.3 mm, with anti-twist device	180 mm x 182 mm x 110 mm	Plastic	Grey	IP66	704.945.4
With mounting cut-out 6 x Ø 22.3 mm, with anti-twist device	180 mm x 182 mm x 110 mm	Plastic	Grey	IP66	704.945.5
Bottom grey similar RAL 7035; cover lead-sealable, yellow similar RAL 1004	65 mm x 65 mm x 57 mm	Plastic		IP66	84-910

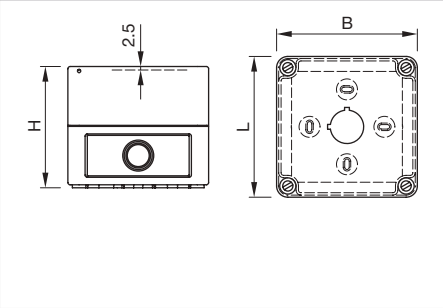

Dimensions [mm]
for Part No. 704.945.1, 704.945.2, 704.945.3, 704.945.4, 704.945.5

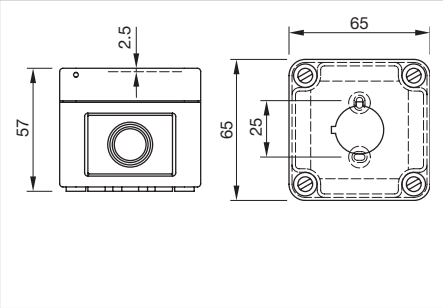

Dimensions [mm]
for Part No. 84-910

Fixing nut

Product attributes	Dimension	Material	Colour	Part No.
Standard version	Ø 25 mm	Plastic	Black	84-901
For emergency stop switch	Ø 28 mm	Plastic	Black	84-905
	Ø 30 mm	Plastic	Black	84-908
	Ø 25 mm	Metal	Silver	84-911

Mounting tool

Product attributes	Dimension	Material	Part No.
For tightening or loosening the fixing nut, for emergency-stop and stop-switch		Plastic	84-996
For tightening or loosening of the fixing nut Ø 22 mm, for Part No. 82-903	Ø 22 mm	Metal	84-997

Dismantling tool

Product attributes	Material	Part No.
For dismantling switching elements or lenses	Metal / plastic	84-918

Housing pole mounting 35 mm

Product attributes	Material	Colour	Mounting cut-out	Part No.
Please note: The cut-out of the pole must read min. 22 mm and needs to be aligned with the switch	Plastic	Yellow	Ø 22.5 mm	84-9500.4
	Plastic	Traffic blue		84-9500.6A
	Plastic	Grey	Ø 22.5 mm	84-9500.8

Additional information

- Screws are not contained in the scope of supply

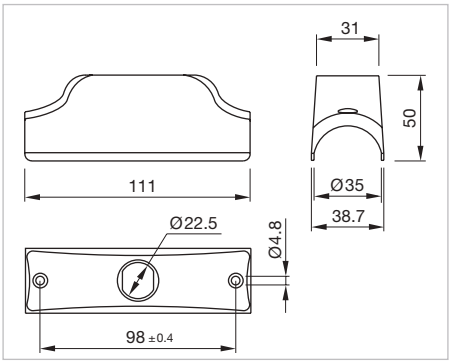

Dimensions [mm]

Housing pole mounting 38 mm

Product attributes	Material	Colour	Mounting cut-out	Part No.
Please note: The cut-out of the pole must read min. 22 mm and needs to be aligned with the switch	Plastic	Yellow	Ø 22.5 mm	84-9600.4
	Plastic	Grey	Ø 22.5 mm	84-9600.8

Additional information

- Screws are not contained in the scope of supply

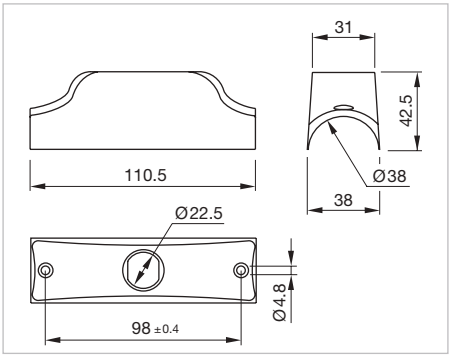

Dimensions [mm]

84 Accessories

Housing wall mounting

Material	Colour	Mounting cut-out	Part No.
Plastic	Yellow	Ø 22.5 mm	84-9800.4
	Grey	Ø 22.5 mm	84-9800.8

Additional information

- Screws are not contained in the scope of supply

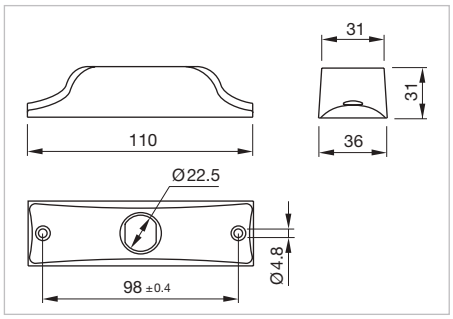

Dimensions [mm]

Cable gland

Product attributes	Material	Colour	IP Protection	Thread	Part No.
With traction relief	Plastic	Grey	IP68	M16 x 1.5 mm	61-9481.6
	Plastic	Grey	IP68	M20 x 1.5 mm	704.945.6

Emergency-stop

Switching system

The double-break switching system can be supplied for the following switching functions:
1 Normally closed, 2 Normally closed, 1 Normally closed + 1 Normally open.
The Normally closed contacts have forced opening according to EN 60947-5-5

Material

Connection cable
Plastic, operating temperature up to +65 °C

Mushroom-head cap
Plastic, as per UL 94 V0

Actuator housing
Plastic, as per UL 94 V0

Material of contact
Silver alloy gold plated

Mechanical characteristics

Front panel thickness
Standard 1 … 4 mm
with emergency stop protective shroud Part No. 84-902 1 … 3 mm

Mounting cut-outs
Ø 22.3 mm as per EN IEC 60947-5-1 with anti-twist device

Terminals
Soldering terminals 2.8 mm x 0.5 mm (solderable), CuSn6 tin-plated
Flat ribbon cable 2-, 4-, or 6-poles 0.35 mm² (AWG 22)

Tightening torque
Fixing nut 0.8 Nm

Actuating force
20 N ± 4 N

Actuating travel
Approx. 5 mm

Mechanical lifetime
250 000 cycles of operations

Electrical characteristics

Standards
The devices comply with: EN IEC 60947-5-1, EN IEC 60947-5-5 (emergency stop), DIN EN ISO 13850, EN IEC 60204

Illumination
LED red with pole reversal, constant current source
Operation Voltage 5 VDC … 30 VDC
Current consumption 9.7 mA … 12.4 mA

Rated Operational Voltage U_e
250 VAC, as per EN IEC 60947-1

Rated Insulation Voltage U_i
250 V, as per EN IEC 60947-1

Rated Impulse Withstand Voltage U_{imp}
4 kV, as per EN IEC 60947-1

Electrical life
50 000 cycles of operations
(inductive cosφ 0,95) as per EN IEC 60947-5-1

Air thermal I_{th}
5 A (plug in)
3 A (cable leads

Switching voltage and switching current
Switch rating AC with silver contact (gold plated), service category AC-15, as per EN IEC 60947-5-1

Voltage	120 VAC	240 VAC
Current	3 A	1.5 A

Switch rating DC for silver contact (gold plated), service category DC-13, as per EN IEC 60947-5-1

NO contacts (48 VA)	NC contacts (60 VA)	NO/NC contacts
12 VDC / 2.0 A	12 VDC / 2.5 A	125 VDC / 0.22 A
24 VDC / 2.0 A	24 VDC / 2.5 A	250 VDC / 0.11 A
48 VDC / 1.0 A	48 VDC / 1.25 A	
60 VDC / 0.8 A	60 VDC / 1.0 A	

Recommended minimum operating data
Silver contacts (gold plated)

Voltage	1 VAC / DC
Current	1 mA

Electric strength
500 VAC, 50 Hz, 1 minute, as per DIN IEC 60512-2

Rated conditional short-circuit current
1000 A, type of short-circuit unit 6 A gG, as per EN IEC 60947-5-1

Protection class
Class II, as per EN IEC 60947-5

84 Technical data

Overvoltage category
III, as per EN IEC 60947-1

Degree of pollution
3, as per EN IEC 60947-1

Ambient conditions

Storage temperature
-25 °C … +80 °C

Operating temperature
-25 °C … +70 °C

Front protection
IP65 front side, as per EN IEC 60529
IP66 front side, as per EN IEC 60529
IP67 front side, as per EN IEC 60529
IP20 (cable lead connection)

Impact resistance
IK07, as per IEC 62262

Shock resistance
(semi-sinusoidal)
Max. 150 m/s², pulse width 11 ms, 3-axis,
as per EN IEC 60068-2-27

Vibration resistance
(sinusoidal)
Max. 50 m/s² at 10 Hz … 500 Hz, 10 cycles, 3-axis,
as per EN IEC 60068-2-6

Climate resistance
Damp heat, cyclic
96 hours, +25 °C/97 %, +55 °C/93 % relative humidity,
as per EN IEC 60068-2-30
Damp heat, steady
56 days, +40 °C/93 % relative humidity,
as per EN IEC 60068-2-78

Dry heat
96 hours, +70 °C, as per EN IEC 60068-2-2

Low temperature
96 hours, −40 °C, as per EN IEC 60068-2-1

Saline mist
96 hours, +35 °C in chemical solution NaCl,
as per EN IEC 60068-2-11

Simulated solar radiation test SA2 and
weathering test SB1 as per EN IEC 60068-2-5

Approvals

Approbations
CB (IEC 60947-5-1, IEC 60947-5-5)
UL NISD
CCC (pending)

Declaration of conformity
CE
UKCA
2006/42/EC (MD)
2011/65/EC (RoHS)

Switching element illuminated pushbutton

Switching system

Short-travel switching system with 2 independent contact points and tactile operation.
Guarantees reliable switching even of very light loads.
Fitted with 1 normally open contact.

Material

Connection cable
Plastic, short-time heat-resistant up to 105 °C

Material of contact
Silver alloy gold plated

Switching element
Plastic, as per UL 94 V0 and
Plastic, as per UL 94 HB

Mechanical characteristics

Terminals
Plug-in terminals 2.8 mm x 0.8 mm (solderable)
Flat ribbon cable 0.5 mm²
PCB terminal

Actuating force
4.5 N ±1 N (measured at the lens)

Tightening torque
Fixing screw mounting flange 0.4 Nm

Actuating travel
~ 0.5 mm

Resistance to heat of soldering
250 °C, 3 s (PCB assembly)
320 °C, 3 s (when using a soldering iron)

Mechanical lifetime
≥ 1 million cycles of operations

Electrical characteristics

Illumination
Single-Chip LED, green, orange, red, yellow, white and blue

Operation Voltage	12 VDC	24 VDC
Current consumption	10 mA	10 mA

Electrical life
as per EN IEC 60512-5

5 million cycles of operation	24 VAC, 50 mA at 480 Ω
5 million cycles of operation	24 VAC, 100 mA at 240 Ω
2 million cycles of operation	42 VAC, 50 mA at 840 Ω
2 million cycles of operation	42 VAC, 100 mA at 420 Ω
300 000 cycles of operation	42 VAC, 100 mA at cosφ 0.4
250 000 cycles of operation	42 VAC, 200 mA at cosφ 0.395
1 million cycles of operation	12 VDC, 250 mA at 48 Ω
1 million cycles of operation	24 VDC, 50 mA at 480 Ω
1 million cycles of operation	24 VDC, 100 mA at 240 Ω
5 million cycles of operation	42 VDC, 25 mA at 1680 Ω
1.5 million cycles of operation	42 VDC, 50 mA at 840 Ω
100 000 cycles of operation	42 VDC, 100 mA at 420 Ω
500 000 cycles of operation	24 VDC, 200 mA at L/R = 30 ms
300 000 cycles of operation	42 VDC, 100 mA at L/R = 30 ms
100 000 cycles of operation	42 VDC, 200 mA at L/R = 30 ms

Electric strength
500 VAC, 50 Hz, 1 minute, as per DIN IEC 60512-2

Ambient conditions

Storage temperature
−40 °C ... +85 °C

Operating temperature
−25 °C ... +70 °C

Protection degree
Back protection:
IP40, standard version
IP67, fully sealed version, with mounted actuator only.

Shock resistance
(semi-sinusoidal)
Max. 100 m/s², pulse width 11 ms, 3-axis,
as per EN IEC 60068-2-27

Vibration resistance
(sinusoidal)
Max. 50 m/s² at 10 Hz … 500 Hz, 10 cycles, 3-axis,
as per EN IEC 60068-2-6

Approvals

Approbations
UL (not valid for cable version)

84 Technical data

Actuator

Material

Lens
Plastic, as per UL 94 V2 or Aluminium anodised

Actuator housing
Plastic, as per UL 94 V0 or Aluminium anodised

Mechanical characteristics

Frontplate thickness
Standard 1 … 4 mm

Tightening torque
Fixing nut max. 80 Ncm

Actuating force
4.5 N ±1 N (measured at the lens)

Actuating travel
1.2 mm

Mechanical lifetime
≥ 1 million cycles of operation

Electrical characteristics

Electrostatic breakdown value
Plastic case ≥ 15 kV
Aluminium case ≥ 5 kV
as per IEC 61000-4-2, mounted in plastic front panel

Ambient conditions

Storage temperature
−40 °C ... +85 °C

Operating temperature
−25 °C ... +70 °C

Protection degree
IP 67 and IP40 front side, as per EN IEC 60529

Climate resistance
Damp heat, cyclic
96 hours, +25 °C / 97 %, +55 °C / 93 % relative humidity,
as per EN IEC 60068-2-30

Damp heat, state
56 days, +40 °C / 93 % relative humidity,
as per EN IEC 60068-2-78

Rapid change of temperature
100 cycles, −40 °C … +80 °C, as per EN IEC 60068-2-14

Approvals

Approbations
EBC (TSI / PRM)
NFF
UL (not valid for cable version)

Conformities
CE
UKCA
2011 / 65 / EC (RoHS)

EAO reserves the right to alter specifications without further notice.

IO-Link Touch – Standard Symbols

Please note

- BXX symbols are illuminated
- CXX symbols are printed on
- Further standard symbols and also customised symbols possible

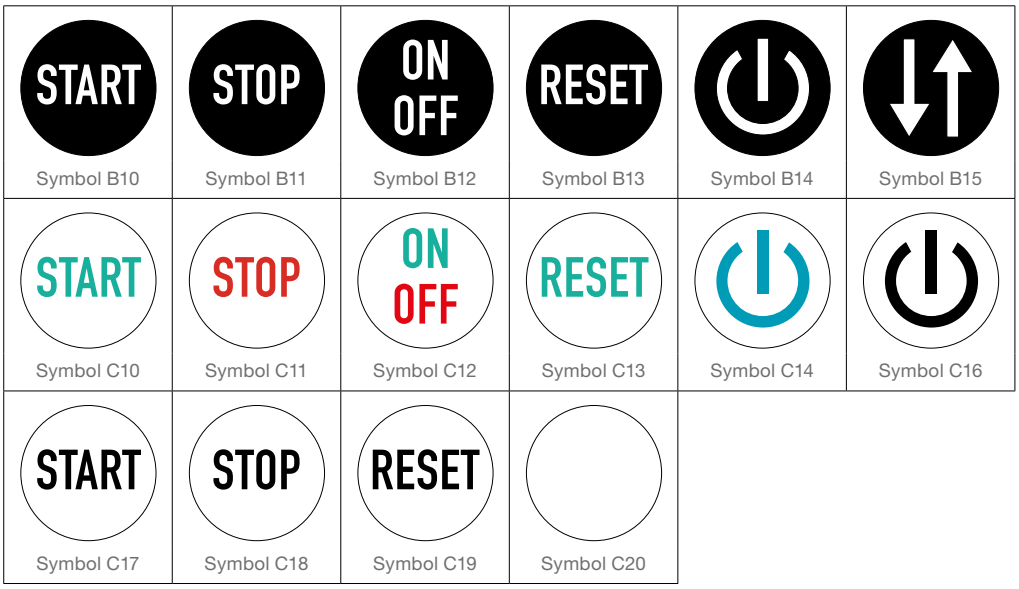

84 Application guidelines

Suppressor circuits

When switching inductive loads such as relays, DC motors, and DC solenoids, it is always important to absorb surges (e. g. with a diode) to protect the contacts. When these inductive loads are switched off, a counter emf can severely damage switch contacts and greatly shorten lifetime.

Fig. 1 shows an inductive load with a free-wheeling diode connected in parallel. This free-wheeling diode provides a path for the inductor current to flow when the current is interrupted by the switch. Without this free-wheeling diode, the voltage across the coil will be limited only by dielectric breakdown voltages of the circuit or parasitic elements of the coil. This voltage can be kilovolts in amplitude even when nominal circuit voltages are low (e. g. 12 VDC) see Fig. 2.

The free-wheeling diode should be chosen so that the reverse breakdown voltage is greater than the voltage driving the inductive load. The DC blocking voltage (VR) of the free-wheeling diode can be found in the datasheet of a diode. The forward current should be equal or greater than the maximum current flowing through the load.

To get an efficient protection, the free-wheeling diode must be connected as close as possible to the inductive load!

Switching with inductive load
Fig. 1

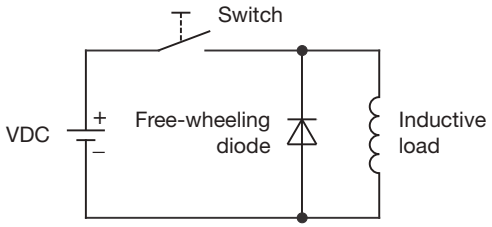

Counter EMF
over load without free-wheeling diode
Fig. 2

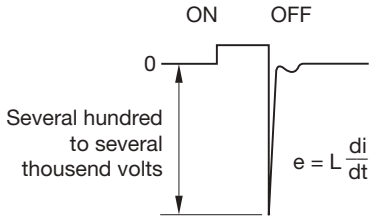

Note for soldering

Process parameter for wave soldering
Basic specification for wave soldering J-STD 75 W4C.

Maximum temperature on the component side (Temp 2): (Temperature must not exceed during the entire processing)	120 °C
Preheating phase (t1 … t2):	70 … 120 sec
Ramp up:	typ. + 1 °C / sec
Ramp up to maximum temperature (t2 … t3):	not defined
Maximum temperature on the soldering side (Temp 3):	250 °C
Maximum time of soldering process (t3 … t4):	3 sec
Ramp down at 170 °C:	typ. – 2 °C/sec

Temperature curve wave soldering

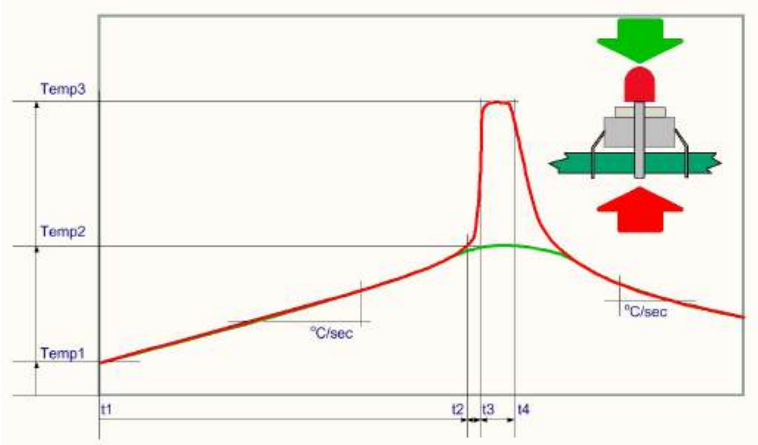

Green curve:	Temperature on the component side of the pcb	
Red curve:	Temperature on the soldering side of the pcb	
Room temperature:	Temp 1	
Preheating:	Temperature process =	Temp 1 … Temp 2
	Process time =	t1 … t2
Ramp up to soldering temperature:	Process time =	t2 … t3
Soldering phase:	Temperature process =	Temp 3
	Process time =	t3 … t4

Iron soldering

Basic specification for iron soldering IEC 60068-2-20

Maximum temperature at tip of iron:	320 °C
Maximum soldering time:	3 sec

Cleaning/Lacquering

The switching elements are not sealed. Cleaning up the PCB may damage the contacts in the switching elements. For this reason, the following points should be noted:

- When soldering make sure that the flux does not pass on the upper side of the PCB.
- When cleaning the PCB with detergents ensure that no dust or other debris may get inside of the switching elements.
- Ensure that no lacquer penetrates into the interior of the switching element when lacquering the PCB.

Storage of components

To obtain the optimum solderability of the components, the following points should be noted during storage:

- Do not store components in locations with high temperature or humidity.
- Do not expose components to corrosive gases.
- Avoid direct sunlight for a long period.

84 Application guidelines

Arrangement mounting flange for switching- and illumination element, PCB mounting

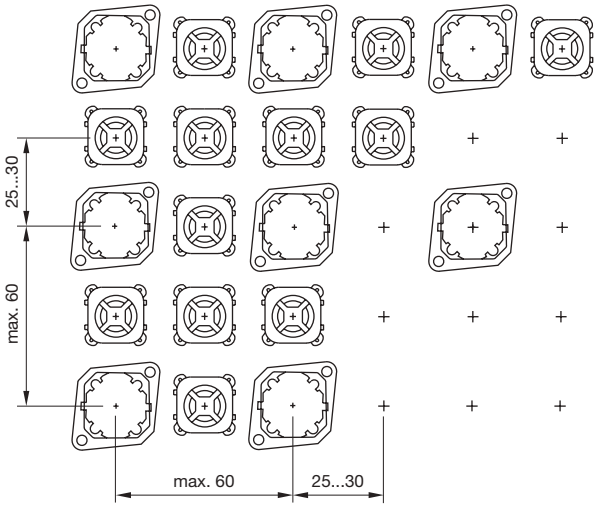

The arrangement of the mounting flanges and their number is determined by the size of the front panel or PCB. To ensure uniform, tactile switching, we recommend a layout of the flanges as per adjacent sketch.

For large PCBs with several switching elements we recommend the following procedure:

1. Fit the actuator to the front panel.
2. Clip the mounting flange to the rear of the intended actuator.
3. Screw the PCB with the components soldered to it to the assembled mounting flange.

This arrangement applies to PCBs 1.6 mm thick.

Dismantling mounting flange

The tool Part No. 84-998 must be used for removing the mounting flange from the actuator.

Before removing the flange, the PCB fixing srews must be loosened.

Part No.	Page
10-2601.3172S	39
10-2601.3173S	39
10-2603.3174S	39
10-2603.3175S	39
10-2603.3176S	39
10-2603.3178S	39
10-2603.320AT	39
10-2603.320CT	39
31-929	52
61-9453.0	50
61-9481.6	56
61-9707.7	38
61-9980.0	49
704.945.1	54
704.945.2	54
704.945.3	54
704.945.4	54
704.945.5	54
704.945.6	56
704.963.0	50
704.963.1	50
704.963.2	50
704.963.3	50
704.963.4	50
704.963.5	50
704.963.6	50
704.963.7	50
704.963.8	50
704.963.9	50
704.964.8	50
704.968.0	49
704.968.1	49
84-0080.7	19
84-0090.7	17
84-0090.7	18
84-0100.0	15
84-0100.0	16
84-0200.7	15
84-0200.7	16
84-1081.7	10
84-1091.7	8
84-1091.7	9
84-1101.0	4
84-1101.0	6
84-1101.0	11
84-1101.0	13
84-1201.0	4
84-1201.0	6
84-1201.0	11
84-1201.0	13
84-1201.2	4
84-1201.2	6
84-1201.2	11
84-1201.2	13
84-1201.4	4
84-1201.4	6
84-1201.4	11
84-1201.4	13
84-1201.5	4
84-1201.5	6
84-1201.5	11
84-1201.5	13
84-1201.6	4
84-1201.6	6
84-1201.6	11
84-1201.6	13
84-1201.7	4
84-1201.7	6
84-1201.7	11
84-1201.7	13
84-1221.7	5
84-1221.7	6
84-1221.7	12
84-1221.7	13
84-2101.0	4
84-2101.0	6
84-2101.0	11

Part No.	Page
84-2101.0	13
84-3100.0	15
84-3100.0	16
84-3103.0000.1	34
84-3103.0000.2	34
84-5220.0020	29
84-5220.0040	29
84-5221.2B20	29
84-5221.2B40	29
84-5230.0020	29
84-5230.0040	29
84-5231.2B20	29
84-5231.2B40	29
84-5240.0020	29
84-5240.0040	29
84-5241.2B20	29
84-5241.2B40	29
84-5241.8D20	32
84-5241.8D40	32
84-5320.0020	30
84-5320.0040	30
84-5321.2B20	30
84-5321.2B40	30
84-5330.0020	30
84-5330.0040	30
84-5331.2B20	30
84-5331.2B40	30
84-5340.0020	30
84-5340.0040	30
84-5341.2B20	30
84-5341.2B40	30
84-5341.8D20	32
84-5341.8D40	32
84-5520.0020	30
84-5520.0040	30
84-5530.0020	30
84-5530.0040	30
84-5540.0020	30
84-5540.0040	30
84-6220.0020	26
84-6220.0040	26
84-6221.2B20	26
84-6221.2B40	26
84-6230.0020	26
84-6230.0040	26
84-6231.2B20	26
84-6231.2B40	26
84-6240.0020	26
84-6240.0040	26
84-6241.2B20	26
84-6241.2B40	27
84-6330.0040	27
84-6331.2B20	27
84-6331.2B40	27
84-6340.0040	27
84-6341.2B20	27
84-6341.2B40	27
84-7111.200	36
84-7111.201	37
84-7111.300	36
84-7111.301	37
84-7111.400	36
84-7111.401	37
84-7111.500	36
84-7111.501	37
84-7111.502	37
84-7111.503	37
84-7111.600	36
84-7111.601	37
84-7111.602	37
84-7111.603	37
84-7111.700	36
84-7111.701	37
84-7111.702	37
84-7111.703	37
84-7114.600A	38
84-7115.200	36

Part No.	Page
84-7115.300	36
84-7115.400	36
84-7115.500	36
84-7115.600	36
84-7115.700	36
84-7121.000	36
84-7121.800	36
84-7124.000A	38
84-7124.200A	38
84-7125.000	36
84-7125.800	36
84-7201.000	37
84-7201.200	37
84-7201.400	37
84-7201.500	37
84-7201.600	37
84-7201.800	37
84-7202.000	37
84-7202.000A	35
84-7202.200	37
84-7202.200A	35
84-7202.500	37
84-7202.600A	35
84-7202.800	37
84-7202.800A	35
84-7205.000A	35
84-7205.200	37
84-7205.200A	35
84-7205.500A	35
84-7205.600A	35
84-7205.800	37
84-7205.800A	35
84-7205.804A	35
84-7205.805A	35
84-7205.806A	35
84-7205.808A	35
84-7211.000	38
84-7211.200	38
84-7211.400	38
84-7211.500	38
84-7211.600	38
84-7211.800	38
84-7215.000	38
84-7215.200	38
84-7215.400	38
84-7215.500	38
84-7215.600	38
84-7215.800	38
84-8001.2320	44
84-8001.2340	45
84-8001.2620	44
84-8001.2640	45
84-8001.3620	44
84-8001.3640	45
84-8001.4320	44
84-8001.4340	45
84-8001.4620	44
84-8001.4640	45
84-8001.5320	44
84-8001.5340	45
84-8001.5620	44
84-8001.5640	45
84-8001.6320	44
84-8001.6620	44
84-8001.6640	45
84-8001.9320	44
84-8001.9340	45
84-8001.9620	44
84-8001.9640	45
84-8005.8620	46
84-8005.8640	46
84-8510.0020	42
84-8510.0040	42
84-8511.2320	40
84-8511.2340	41
84-8511.2620	40
84-8511.2640	41

Part No.	Page
84-8511.3320	40
84-8511.3620	40
84-8511.3640	41
84-8511.4320	40
84-8511.4340	41
84-8511.4620	40
84-8511.4640	41
84-8511.5320	40
84-8511.5340	41
84-8511.5620	40
84-8511.5640	41
84-8511.6320	40
84-8511.6340	41
84-8511.6620	40
84-8511.6640	41
84-8511.9320	40
84-8511.9340	41
84-8511.9620	40
84-8511.9640	41
84-8515.7640	42
84-8515.8640	42
84-900	53
84-901	54
84-902	51
84-902A	51
84-902B	51
84-902D	51
84-905	54
84-906	51
84-908	54
84-909	51
84-910	54
84-9103.7	50
84-911	54
84-916	51
84-918	54
84-920	53
84-922	51
84-9300.4	52
84-9300.8	52
84-9420	52
84-9500.4	55
84-9500.6A	55
84-9500.8	55
84-960.0	48
84-9600.4	55
84-9600.8	55
84-9700.4	52
84-9700.8	52
84-9800.4	56
84-9800.8	56
84-996	56
84-997	56
84-ACKS-B10-04B9	24
84-ACKS-B11-04BA	24
84-ACKS-B12-04BB	24
84-ACKS-B13-04BC	24
84-ACKS-B14-04BD	24
84-ACKS-B15-04BE	24
84-ACKS-C10-04BF	24
84-ACKS-C11-04C0	24
84-ACKS-C12-04C1	24
84-ACKS-C14-04C2	24
84-ACKS-C16-04C3	24
84-ACKS-C17-04C4	24
84-ACKS-C18-04C5	24
84-ACKS-C19-04C6	24
84-ACKS-C20-04C7	24
84-ADKS-B10-04AA	22
84-ADKS-B11-04AB	22
84-ADKS-B12-04AC	22
84-ADKS-B13-04AD	22
84-ADKS-B14-04AE	22
84-ADKS-B15-04AF	22
84-ADKS-C10-04B0	22
84-ADKS-C11-04B1	22
84-ADKS-C12-04B2	22

Part No.	Page
84-ADKS-C14-04B3	22
84-ADKS-C16-04B4	22
84-ADKS-C17-04B5	22
84-ADKS-C18-04B6	22
84-ADKS-C19-04B7	22
84-ADKS-C20-04B8	22
84-ASKS-B10-049C	20
84-ASKS-B11-049D	20
84-ASKS-B12-049E	20
84-ASKS-B13-049F	20
84-ASKS-B14-04A0	20
84-ASKS-B15-04A1	20
84-ASKS-C10-04A2	20
84-ASKS-C11-04A3	20
84-ASKS-C12-04A4	20
84-ASKS-C14-04A5	20
84-ASKS-C16-04A6	20
84-ASKS-C17-04A7	20
84-ASKS-C18-04A8	20
84-ASKS-C19-04A9	20
84-ASKS-C20-049B	20
92-800.042	47
92-851.342	43
92-960.0	48